JET45 HARDWARE PINOUT

The listed pins, plugs and hardware detailed in this document are designed to work exclusively with the Jet45 Interface Modules powered by the Meduino Mega and Arduino Nano cards for both the Jet45 Advanced Avionics Suite and the up coming Jet45 Advanced Systems Software. All pinout assignments listed in this document are hardwired with the exception of the encoder directions which can be changed in the Arduino .ini file.

All physical hardware and part numbers are listed in this document! It is highly recommended to use this hardware in order to avoid unfavorable results in your simulation. The Interface Module Illustrations in this document are designed for quick pin and plug reference. Please refer to the JET45 Interface Modules DXF drawing for more detailed information if needed.

All Interface modules include a “RESET” plug which consist of a pin for a Reset Button and a pin for a Remote Status LED. If a particular module either comes off line or acts erratically, simply resetting the module with the Reset Button will resolve most if not all issues. The normal status indication of the LED is a repeating “heartbeat” flash. If the LED indicates solid or extinguished, reset is recommended. The Reset Button and Remote Status LEDs can be remotely mounted to a location of your choice.

Several of our interface modules use the **Meduino Mega2560 R3 Pro Mini** which functions exactly the same way as an Arduino Mega 2560 interface card. These cards are desirable because of their small footprint and female headers already soldered to the backside of the cards. The Meduino Mega2560 R3 Pro Mini ATMEGA16U2 can be found **HERE**

There are two PWM options for all interface module that require a 16 Channel 12-bit PWM Servo Motor Driver for the LEDs and servos. The preferred PWMs used with Option “A” modules are slightly larger than the Option “B” standard 16 Channel PWMs found anywhere. The desirable feature with the Option “A” PWMs is the female headers are already solder to the back side of the PWM PCB. The Option “A” PWMs can be found **HERE**

NOTE: A blue “* “ depicts switch and action change from Lear45 Sim v1.0 to v2.0

NOTE: Legends in a set of **[** SAMPLE **]** depicts guarded switches

NOTE: Pin assignments are color coded to match wire color, e.g. PIN A3 = GREEN wire

JET45 ADVANCED AVIONICS SUITE

FGC PANEL MODULE

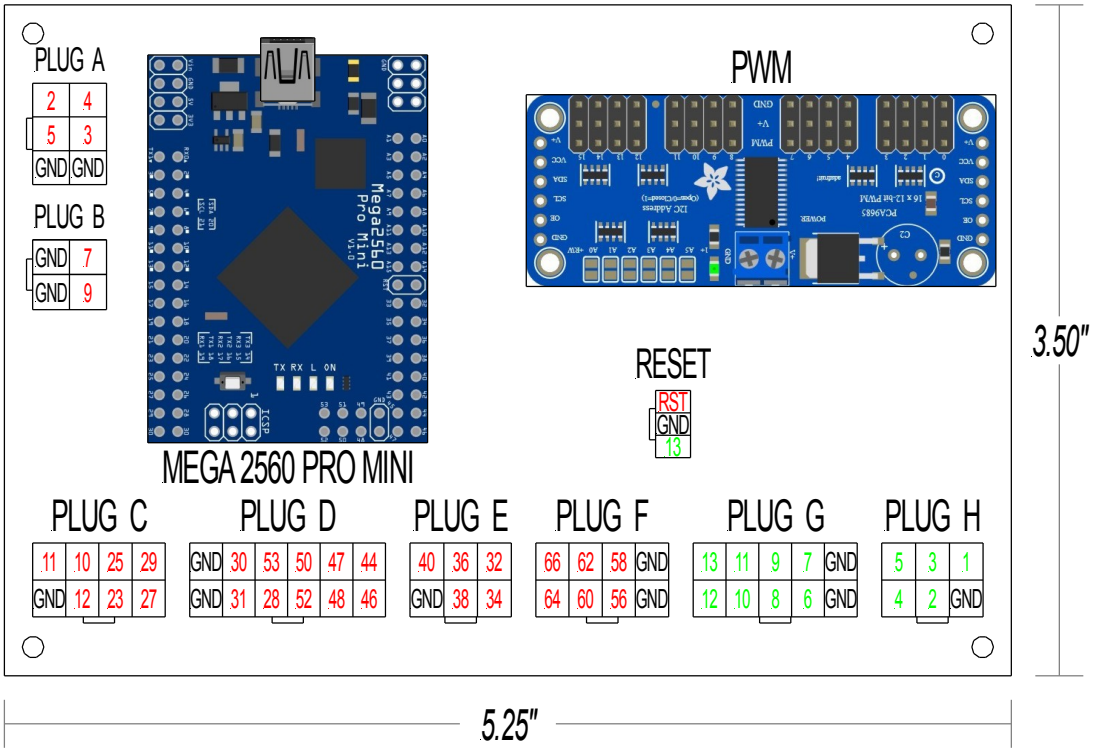

PLUG “A” OVERHEAD COMPASS:

PIN	DESCRIPTION	SWITCH	ACTION	LEGEND	TYPE
2	DIGITAL INPUT	N/A	N/A	N/A	N/A
3	DIGITAL INPUT	N/A	N/A	N/A	N/A
4	DIGITAL INPUT	N/A	N/A	N/A	N/A
5	DIGITAL INPUT	N/A	N/A	N/A	N/A

NOTE: Plug “A” is to be used with a Stepper Motor to control the Overhead Compass

PLUG "B" STANDBY ALTIMETER ENCODER: (OPTIONAL)

PIN	DESCRIPTION	SWITCH	ACTION	LEGEND	TYPE
7	INCREASE	318-ENC70120F-10P	Digital Inc	None	Encoder
9	DECREASE	" "	Digital Dec	None	Encoder

NOTE: Altimeter encoder pins are not needed if Flight Illusion gauges are used

PLUG "C" FGC PANEL (LEFT) SWITCHES:

PIN	DESCRIPTION	SWITCH	ACTION	LEGEND	TYPE
10	FLT DIRECTOR 1	MTN 107-6612	Momentary	FD1	Push
11	COURSE 1 SYNC	PEC11R-4125F-S0018	Momentary	CRS1	Push
12	HEADING	MTN 107-6612	Momentary	HDG	Push
23	HEADING SYNC	PEC11R-4125F-S0018	Momentary	HDG	Push
25	NAVIGATION	MTN 107-6612	Momentary	NAV	Push
27	APPROACH	MTN 107-6612	Momentary	APP	Push
29	BANK ANGLE	MTN 107-6612	Momentary	BNK	Push

PLUG "D" FGC PANEL INCODERS:

PIN	DESCRIPTION	SWITCH	ACTION	LEGEND	TYPE
28	COURSE 1 INC	PEC11R-4125F-S0018	Digital Inc	CRS 1	Encoder
30	COURSE 1 DEC	" "	Digital Dec	CRS 1	Encoder
31	HEADING INC	PEC11R-4125F-S0018	Digital Inc	HDG	Encoder
44	HEADING DEC	" "	Digital Dec	HDG	Encoder
46	SPEED INC	PEC11R-4125F-S0018	Digital Inc	SPD	Encoder
47	SPEED DEC	" "	Digital Dec	SPD	Encoder
48	ALT SEL INC	PEC11R-4125F-N0018	Digital Inc	ASEL	Encoder
50	ALT SEL DEC	" "	Digital Dec	ASEL	Encoder
52	COURSE 2 INC	PEC11R-4125F-S0018	Digital Inc	CRS 2	Encoder
53	COURSE 2 DEC	" "	Digital Dec	CRS 2	Encoder

PLUG "E" FGC PANEL (CENTER) SWITCHES:

PIN	DESCRIPTION	SWITCH	ACTION	LEGEND	TYPE
32	AUTOPILOT	MTN 107-6612	Momentary	AP	Push
34	TRANSFER	MTN 107-6612	Momentary	XFR	Push
36	YAW DAMPER	MTN 107-6612	Momentary	YD	Push
38	SPEED	MTN 107-6612	Momentary	SPD	Push
40	PUSH IAS/M	PEC11R-4125F-S0018	Momentary	IAS/M	Push

PLUG “F” FGC PANEL (RIGHT) SWITCHES:

PIN	DESCRIPTION	SWITCH	ACTION	LEGEND	TYPE
56	FLT LEVEL CHG	MTN 107-6612	Momentary	FLC	Push
58	VERTICAL SPD	MTN 107-6612	Momentary	VS	Push
60	VERTICAL NAV	MTN 107-6612	Momentary	VNV	Push
62	ALTITUDE	MTN 107-6612	Momentary	ALT	Push
64	FLT DIRICTOR 2	MTN 107-6612	Momentary	FD2	Push
66	COURSE 2 SYNC	PEC11R-4125F-S0018	Momentary	CRS2	Push

PLUG “G” FGC PANEL (LEFT/RIGHT) LEDs:

PIN	DESCRIPTION	SWITCH	ACTION	LEGEND	COLOR
6	HDG INDICATOR	MTN 107-6612	Momentary	HDG	GREEN
7	NAV INDICATOR	MTN 107-6612	Momentary	NAV	GREEN
8	APP INDICATOR	MTN 107-6612	Momentary	APP	GREEN
9	BNK INDICATOR	MTN 107-6612	Momentary	BNK	GREEN
10	FLC INDICATOR	MTN 107-6612	Momentary	FLC	GREEN
11	VS INDICATOR	MTN 107-6612	Momentary	VS	GREEN
12	VNV INDICATOR	MTN 107-6612	Momentary	VNV	GREEN
13	ALT INDICATOR	MTN 107-6612	Momentary	ALT	GREEN

PLUG “H” FGC PANEL (CENTER) LEDs:

PIN	DESCRIPTION	SWITCH	ACTION	LEGEND	COLOR
1	AP INDICATOR	MTN 107-6612	Momentary	AP	GREEN
2	YD INDICATOR	MTN 107-6612	Momentary	YD	GREEN
3	SPD INDICATOR	MTN 107-6612	Momentary	SPD	GREEN
4	L XFR INDICATOR	MTN 107-6612	Momentary	None	GREEN
5	R XFR INDICATOR	MTN 107-6612	Momentary	None	GREEN

Intentionally Left Blank

CDU 1 MODULE

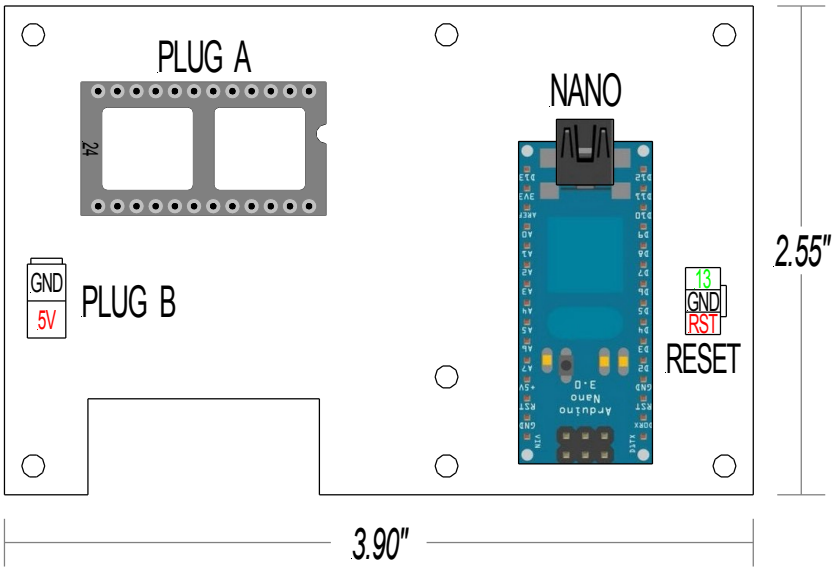

PLUG “A” CDU 1 ALL SWITCHES:

Use authentic UNS-1 Key Panel with attached 24 pin plug. The Arduino Nano utilizes the “matrix row and column” system. All you need to do is plug in the 24 pin plug into the 24 pin socket!

PLUG “B” CDU 1 (5 VOLT) BACKLIGHTING:

Use 5V power source from Center Pedestal LCU Channel via PWM

Intentionally Left Blank

CDU 2 MODULE

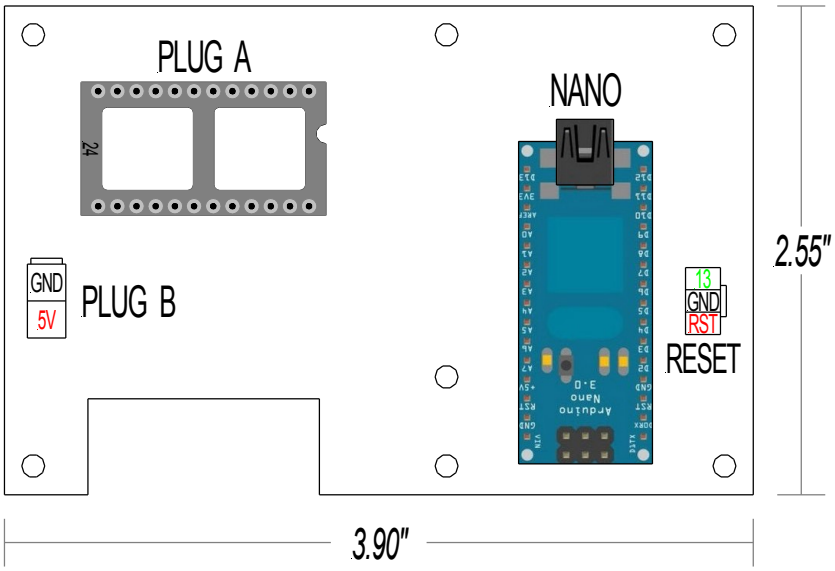

PLUG “A” CDU 2 ALL SWITCHES:

Use authentic UNS-1 Key Panel with attached 24 pin plug. The Arduino Nano utilizes the “matrix row and column” system. All you need to do is plug in the 24 pin plug into the 24 pin socket!

PLUG “B” CDU 2 (5 VOLT) BACKLIGHTING:

Use 5V power source from Center Pedestal LCU Channel via PWM

Intentionally Left Blank

CWP MODULE

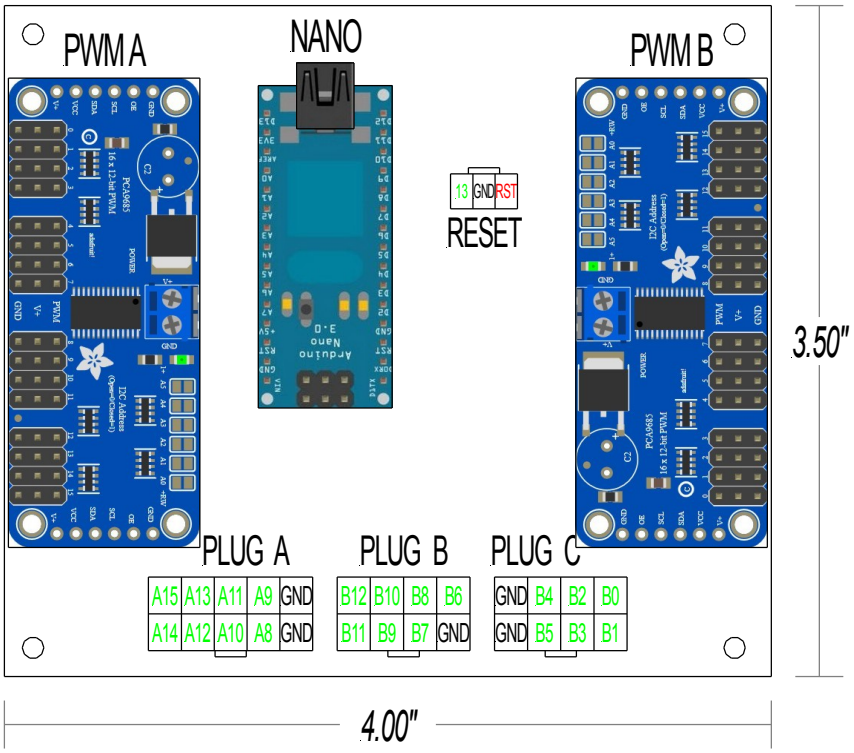

PLUG “A” CWP (LEFT) LEDs:

PIN	DESCRIPTION	SWITCH	ACTION	LEGEND	COLOR
A8	L REV UNSAFE	N/A	N/A	L REV UNSAFE	RED
A9	L ENG PYLON OVHT	N/A	N/A	L ENG PYLON OVHT	RED
A10	NORMAL BRAKES FAIL	N/A	N/A	NORMAL BRAKES FAIL	RED
A11	GEAR	N/A	N/A	GEAR	RED
A12	L OIL PRESS LOW	N/A	N/A	L OIL PRESS LOW	RED
A13	L FUEL PRESS LOW	N/A	N/A	L FUEL PRESS LOW	RED
A14	CABIN ALT	N/A	N/A	CABIN ALT	RED
A15	L BLEED AIR LEAK	N/A	N/A	L BLEED AIR LEAK	RED

PLUG “B” CWP (RIGHT) LEDs:

PIN	DESCRIPTION	SWITCH	ACTION	LEGEND	COLOR
B6	GEN FAIL	N/A	N/A	GEN FAIL	RED
B7	ENTRY DOOR	N/A	N/A	ENTRY DOOR	RED
B8	R ENG PYLON OVHT	N/A	N/A	R ENG PYLON OVHT	RED
B9	R REV UNSAFE	N/A	N/A	R REV UNSAFE	RED
B10	R BLEED AIR LEAK	N/A	N/A	R BLEED AIR LEAK	RED
B11	R FUEL PRESS LOW	N/A	N/A	R FUEL PRESS LOW	RED
B12	R OIL PRESS LOW	N/A	N/A	R OIL PRESS LOW	RED

PLUG “C” CWP (CENTER) LEDs:

PIN	DESCRIPTION	SWITCH	ACTION	LEGEND	COLOR
B0	L BATT OVHT	N/A	N/A	L BATT OVHT	RED
B1	EMER BATTERY	N/A	N/A	EMER BATTERY	WHITE
B2	R BATT OVHT	N/A	N/A	R BATT OVHT	RED
B3	WING OVHT	N/A	N/A	WING OVHT	RED
B4	WING/STAB LEAK	N/A	N/A	WING/STAB LEAK	RED
B5	STAB OVHT	N/A	N/A	STAB OVHT	RED

Addressing PWM B: Each PWM board in a chain must be assigned a unique address. This is done with the address jumpers on the upper right edge of the PWM board. The default I2C base address for each board is 0x40. The binary address that you program with the address jumpers is added to the base I2C address. To program PWM B address offset, use a drop of solder to bridge A0 or R1 depending on which PCA9685 PWM you have.

(PWM A) Board 0: Address = 0x40 Offset = binary 00000 (no jumpers required)
(PWM B) Board 1: Address = 0x41 Offset = binary 00001 (bridge A0 or R1)

Intentionally Left Blank

DU1 / EFIS 1 MODULE

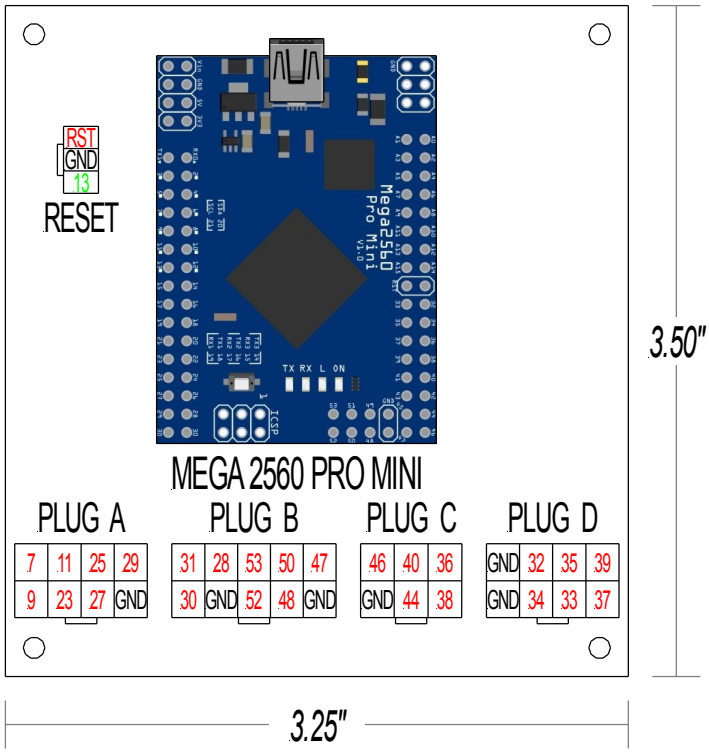

PLUG “A” EFIS1 PANEL BUTTONS:

PIN	DESCRIPTION	SWITCH	ACTION	LEGEND	TYPE
7	In / hPa	OMRON B3F-1055	Momentary	In / hPa	Push
9	CUE	OMRON B3F-1055	Momentary	CUE	Push
11	FPA	OMRON B3F-1055	Momentary	FPA	Push
23	WX	OMRON B3F-1055	Momentary	WX	Push
25	FMS	OMRON B3F-1055	Momentary	FMS	Push
27	HSI	OMRON B3F-1055	Momentary	HSI	Push
29	NAV	OMRON B3F-1055	Momentary	NAV	Push

PLUG “B” EFIS1 PANEL SELECTORS:

PIN	DESCRIPTION	SWITCH	ACTION	LEGEND	TYPE
28	BRG O FMS	A11215RNZQ	Selector	FMS	Rotary
30	BRG O ADF	“ “	Selector	ADF	Rotary
31	BRG O NAV	“ “	Selector	NAV	Rotary
47	BRG O OFF	“ “	Selector	OFF	Rotary
48	BRG <> FMS	A11215RNZQ	Selector	FMS	Rotary
50	BRG <> ADF	“ “	Selector	ADF	Rotary
52	BRG <> NAV	“ “	Selector	NAV	Rotary
53	BRG <> OFF	“ “	Selector	OFF	Rotary

PLUG “C” EFIS1 PANEL ENCODERS:

PIN	DESCRIPTION	SWITCH	ACTION	LEGEND	TYPE
36	OUTBD DU DIM INC	EC11EBB24C03	Digital Inc	DIM	Encoder
38	OUTBD DU DIM DEC	“ “	Digital Dec	DIM	Encoder
40	INBD DU DIM INC	“ “	Digital Inc	DIM	Encoder
44	INBD DU DIM DEC	“ “	Digital Dec	DIM	Encoder
46	PUSH TO TEST	“ “	Momentary	PUSH TO TEST	Push

PLUG “D” DU1 PANEL SWITCHES:

PIN	DESCRIPTION	SWITCH	ACTION	LEGEND	TYPE
32	MINIMUMS INC	PEC11R-4315F-N0012	Digital Inc	MINIMUMS	Encoder
33	MINIMUMS DEC	“ “	Digital Dec	MINIMUMS	Encoder
34	RA/BARO	OMRON B3F-1005	Momentary	RA/BARO	Push
35	STD	OMRON B3F-1005	Momentary	STD	Push
37	BARO SET INC	PEC11R-4315F-N0012	Digital Inc	BARO SET	Encoder
39	BARO SET DEC	“ “	Digital Dec	BARO SET	Encoder

Intentionally Left Blank

DU2 / REVERSION 1 MODULE

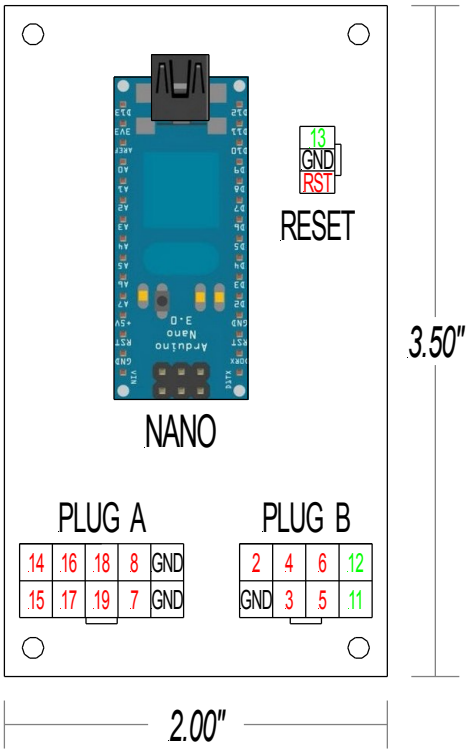

PLUG “A” DU2 PANEL SWITCHES:

PIN	DESCRIPTION	SWITCH	ACTION	LEGEND	TYPE
7	RTRY SET INC	PEC11R-4315F-N0012	Digital Inc	None	Encoder
8	RTRY SET DEC	“ “	Digital Dec	None	Encoder
14	SELECT 1	OMRON B3F-1005	Momentary	None	Push
15	SELECT 2	OMRON B3F-1005	Momentary	None	Push
16	SELECT 3	OMRON B3F-1005	Momentary	None	Push
17	SELECT 4	OMRON B3F-1005	Momentary	None	Push
18	SELECT 5	OMRON B3F-1005	Momentary	None	Push
19	SELECT 6	OMRON B3F-1005	Momentary	None	Push

PLUG “B” REVERSION 1 PANEL SWITCHES:

PIN	DESCRIPTION	SWITCH	ACTION	LEGEND	TYPE
2	WARN/CAUT	AML21CBA2AC	Momentary	WARN/CAUT	Push
3	DU 2 SELECTOR	A12415RNZQ	Selector	PFD	Rotary
4	DU 2 SELECTOR	“ “	Selector	NORM	Rotary
5	DU 2 SELECTOR	“ “	Selector	OFF	Rotary
6	EICAS REV PUSH	MB2411S1W01-HB	Momentary	EICAS REV	Push
11	WARN INDICATOR	AML21CBA2AC	Momentary	WARN	RED
12	CAUT INDICATOR	“ “	Momentary	CAUT	AMBER

NOTE: Pins 11 and 12 are for “CAUT” and “WARN” LED Indicators

DU3 / REVERSION 2 MODULE

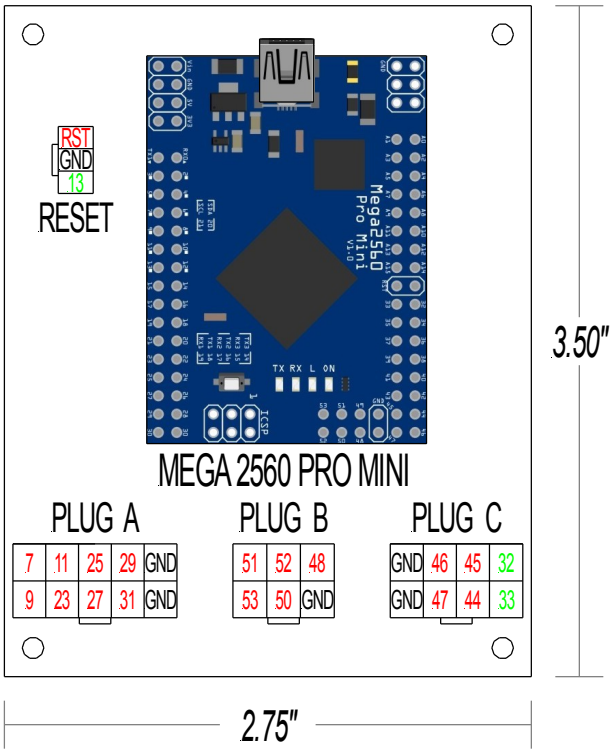

PLUG “A” DU3 PANEL SWITCHES:

PIN	DESCRIPTION	SWITCH	ACTION	LEGEND	TYPE
7	RTRY SET INC	PEC11R-4315F-N0012	Digital Inc	None	Encoder
9	RTRY SET DEC	“ “	Digital Dec	None	Encoder
11	SELECT 1	OMRON B3F-1005	Momentary	None	Push
23	SELECT 2	OMRON B3F-1005	Momentary	None	Push
25	SELECT 3	OMRON B3F-1005	Momentary	None	Push
27	SELECT 4	OMRON B3F-1005	Momentary	None	Push
29	SELECT 5	OMRON B3F-1005	Momentary	None	Push
31	SELECT 6	OMRON B3F-1005	Momentary	None	Push

PLUG “B” MFD JOYSTICK SWITCHES:

PIN	DESCRIPTION	SWITCH	ACTION	LEGEND	TYPE
48	JOYSTICK PUSH	RKJXT1F42001	Momentary	MDF JOYSTICK	Push
50	JOYSTICK UP	“ “	Momentary	MDF JOYSTICK	Pos 360
51	JOYSTICK DN	“ “	Momentary	MDF JOYSTICK	Pos 180
52	JOYSTICK LEFT	“ “	Momentary	MDF JOYSTICK	Pos 270
53	JOYSTICK RIGHT	“ “	Momentary	MDF JOYSTICK	Pos 090

PLUG “C” REVERSION 2 PANEL SWITCHES:

PIN	DESCRIPTION	SWITCH	ACTION	LEGEND	TYPE
32	WARN INDICATOR	AML21CBA2AC	Momentary	WARN	RED
33	CAUT INDICATOR	“ “	Momentary	CAUT	AMBER
44	WARN/CAUT	AML21CBA2AC	Momentary	WARN/CAUT	Push
45	DU 3 SELECTOR	A12415RNZQ	Selector	PFD	Rotary
46	DU 3 SELECTOR	“ “	Selector	NORM	Rotary
47	EICAS REV PUSH	MB2411S1W01-HB	Momentary	EICAS REV	Push

NOTE: Pins 32 and 33 are for “CAUT” and “WARN” LED Indicators

DU4 / EFIS 2 MODULE

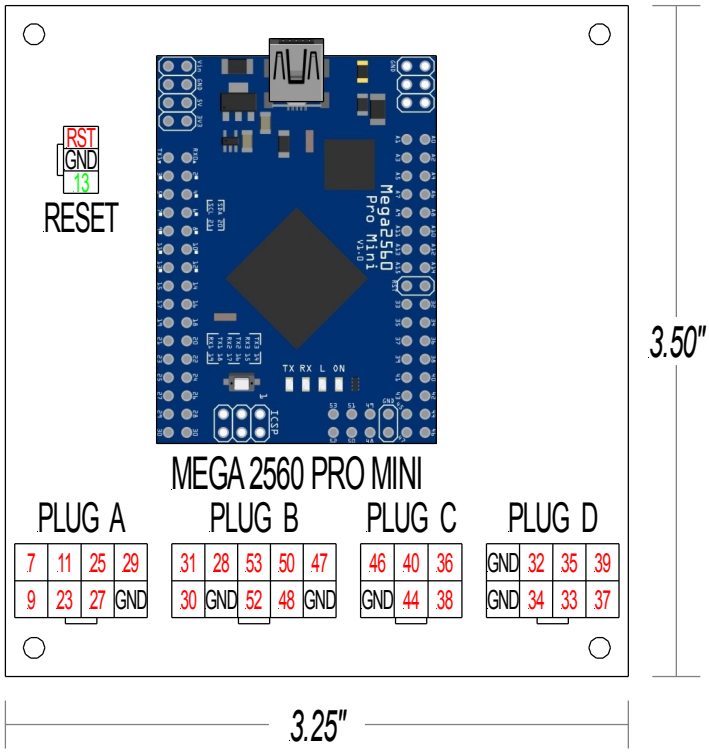

PLUG “A” EFIS2 PANEL BUTTONS:

PIN	DESCRIPTION	SWITCH	ACTION	LEGEND	TYPE
7	In / hPa	OMRON B3F-1055	Momentary	In / hPa	Push
9	CUE	OMRON B3F-1055	Momentary	CUE	Push
11	FPA	OMRON B3F-1055	Momentary	FPA	Push
23	WX	OMRON B3F-1055	Momentary	WX	Push
25	FMS	OMRON B3F-1055	Momentary	FMS	Push
27	HSI	OMRON B3F-1055	Momentary	HSI	Push
29	NAV	OMRON B3F-1055	Momentary	NAV	Push

PLUG “B” EFIS2 PANEL SELECTORS:

PIN	DESCRIPTION	SWITCH	ACTION	LEGEND	TYPE
28	BRG O FMS	A11215RNZQ	Selector	FMS	Rotary
30	BRG O ADF	“ “	Selector	ADF	Rotary
31	BRG O NAV	“ “	Selector	NAV	Rotary
47	BRG O OFF	“ “	Selector	OFF	Rotary
48	BRG <> FMS	A11215RNZQ	Selector	FMS	Rotary
50	BRG <> ADF	“ “	Selector	ADF	Rotary
52	BRG <> NAV	“ “	Selector	NAV	Rotary
53	BRG <> OFF	“ “	Selector	OFF	Rotary

PLUG “C” EFIS2 PANEL ENCODERS:

PIN	DESCRIPTION	SWITCH	ACTION	LEGEND	TYPE
36	OUTBD DU DIM INC	EC11EBB24C03	Digital Inc	DIM	Encoder
38	OUTBD DU DIM DEC	“ “	Digital Dec	DIM	Encoder
40	INBD DU DIM INC	“ “	Digital Inc	DIM	Encoder
44	INBD DU DIM DEC	“ “	Digital Dec	DIM	Encoder
46	PUSH TO TEST	“ “	Momentary	PUSH TO TEST	Push

PLUG “D” DU4 PANEL SWITCHES:

PIN	DESCRIPTION	SWITCH	ACTION	LEGEND	TYPE
32	MINIMUMS INC	PEC11R-4315F-N0012	Digital Inc	MINIMUMS	Encoder
33	MINIMUMS DEC	“ “	Digital Dec	MINIMUMS	Encoder
34	RA/BARO	OMRON B3F-1005	Momentary	RA/BARO	Push
35	STD	OMRON B3F-1005	Momentary	STD	Push
37	BARO SET INC	PEC11R-4315F-N0012	Digital Inc	BARO SET	Encoder
39	BARO SET DEC	“ “	Digital Dec	BARO SET	Encoder

Intentionally Left Blank

RMU1 / CDR MODULE

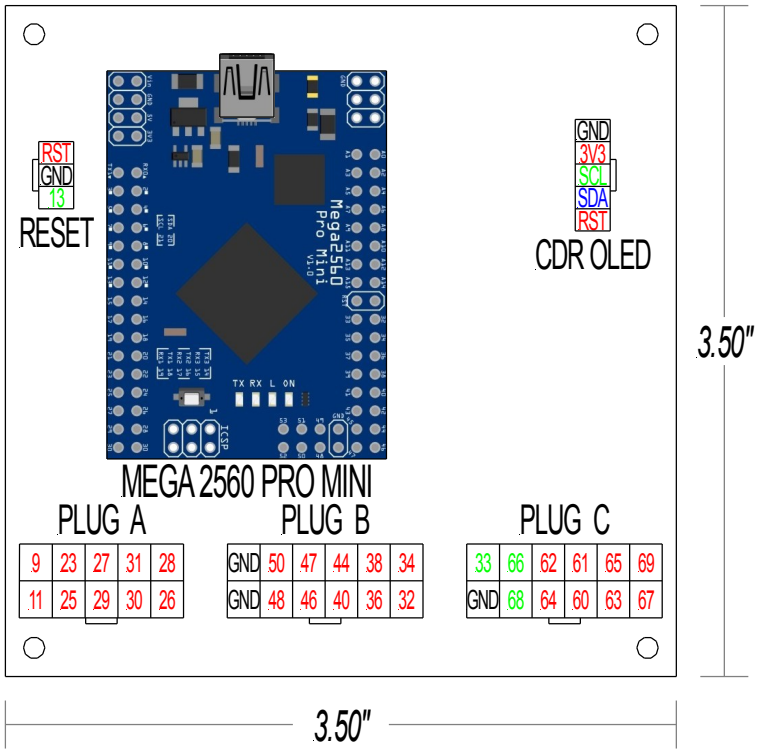

PLUG “A” RMU 1 (LEFT) SWITCHES:

PIN	DESCRIPTION	SWITCH	ACTION	LEGEND	TYPE
9	TRANSFER 1	OMRON B3F-1055	Momentary	v---^	Push
11	LINE SELECT 1	OMRON B3F-1055	Momentary	-----	Push
23	LINE SELECT 2	OMRON B3F-1055	Momentary	-----	Push
25	LINE SELECT 3	OMRON B3F-1055	Momentary	-----	Push
26	LINE SELECT 4	OMRON B3F-1055	Momentary	-----	Push
27	LINE SELECT 5	OMRON B3F-1055	Momentary	-----	Push
28	ID FUNCTION	OMRON B3F-1055	Momentary	ID	Push
29	DIM FUNCTION	OMRON B3F-1055	Momentary	DIM	Push
30	PGE FUNCTION	OMRON B3F-1055	Momentary	PGE	Push
31	STO FUNCTION	OMRON B3F-1055	Momentary	STO	Push

PLUG “B” RMU 1 (RIGHT) SWITCHES:

PIN	DESCRIPTION	SWITCH	ACTION	LEGEND	TYPE
32	TRANSFER 2	OMRON B3F-1055	Momentary	v---^	Push
34	LINE SELECT 6	OMRON B3F-1055	Momentary	-----	Push
36	LINE SELECT 7	OMRON B3F-1055	Momentary	-----	Push
38	LINE SELECT 8	OMRON B3F-1055	Momentary	-----	Push
40	LINE SELECT 9	OMRON B3F-1055	Momentary	-----	Push
44	LINE SELECT 10	OMRON B3F-1055	Momentary	-----	Push
46	OUTER INC	EC11EBB24C03	Digital Inc	TUNE	Encoder
47	OUTER DEC	“ “	Digital Dec	TUNE	Encoder
48	INNER INC	“ “	Digital Inc	TUNE	Encoder
50	INNER DEC	“ “	Digital Dec	TUNE	Encoder

NOTE: **SQ**, ½, **TST** and **DME** button functions are **NOT** modeled

PLUG “C” CDR SWITCHES:

PIN	DESCRIPTION	SWITCH	ACTION	LEGEND	TYPE
33	1 COM/NAV B/L	N/A	Display B/L	1 COM/NAV	White
60	OUTTER INC	EC11EBB24C03	Digital Inc	TUNE	Encoder
61	OUTTER DEC	“ “	Digital Dec	TUNE	Encoder
62	INNER INC	“ “	Digital Inc	TUNE	Encoder
63	INNER DEC	“ “	Digital Dec	TUNE	Encoder
64	TRANSFER	OMRON B3F-1055	Momentary	v----^	Push
65	EMER FREQ	OMRON B3F-1055	Momentary	EMER	Push
66	COM1 INDICATOR	N/A	Indicator	>	White
67	NAV AUDIO	OMRON B3F-1055	Momentary	NAV AUDIO	Push
68	NAV1 INDICATOR	N/A	Indicator	>	White
69	SQUELCH	OMRON B3F-1055	Momentary	SQ	Push

NOTE: Pin 33 is for 1 COM and NAV Display Back Lighting

NOTE: Pins 66 & 68 are for COM & NAV Arrow Indicators

RMU2 MODULE

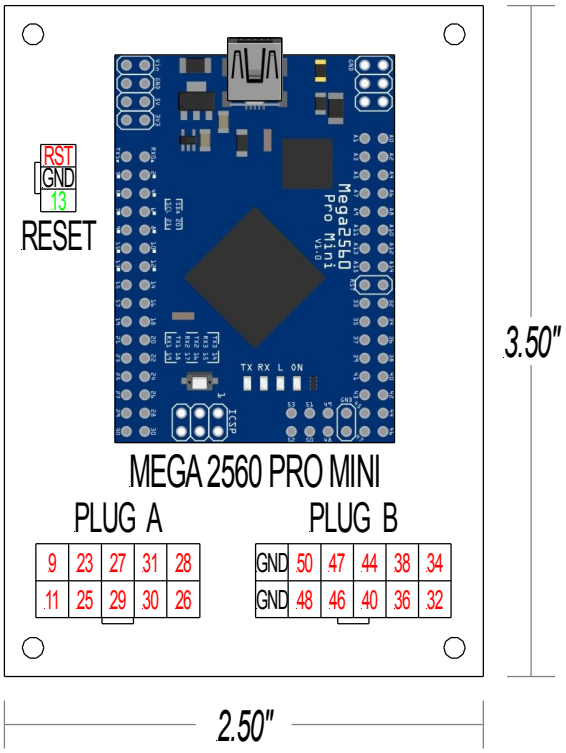

PLUG “A” RMU 2 (LEFT) SWITCHES:

PIN	DESCRIPTION	SWITCH	ACTION	LEGEND	TYPE
9	TRANSFER 1	OMRON B3F-1055	Momentary	v---^	Push
11	LINE SELECT 1	OMRON B3F-1055	Momentary	-----	Push
23	LINE SELECT 2	OMRON B3F-1055	Momentary	-----	Push
25	LINE SELECT 3	OMRON B3F-1055	Momentary	-----	Push
26	LINE SELECT 4	OMRON B3F-1055	Momentary	-----	Push
27	LINE SELECT 5	OMRON B3F-1055	Momentary	-----	Push
28	ID FUNCTION	OMRON B3F-1055	Momentary	ID	Push
29	DIM FUNCTION	OMRON B3F-1055	Momentary	DIM	Push
30	PGE FUNCTION	OMRON B3F-1055	Momentary	PGE	Push
31	STO FUNCTION	OMRON B3F-1055	Momentary	STO	Push

PLUG “B” RMU 2 (RIGHT) SWITCHES:

PIN	DESCRIPTION	SWITCH	ACTION	LEGEND	TYPE
32	TRANSFER 2	OMRON B3F-1055	Momentary	v---^	Push
34	LINE SELECT 6	OMRON B3F-1055	Momentary	-----	Push
36	LINE SELECT 7	OMRON B3F-1055	Momentary	-----	Push
38	LINE SELECT 8	OMRON B3F-1055	Momentary	-----	Push
40	LINE SELECT 9	OMRON B3F-1055	Momentary	-----	Push
44	LINE SELECT 10	OMRON B3F-1055	Momentary	-----	Push
46	OUTER INC	EC11EBB24C03	Digital Inc	TUNE	Encoder
47	OUTER DEC	“ “	Digital Dec	TUNE	Encoder
48	INNER INC	“ “	Digital Inc	TUNE	Encoder
50	INNER DEC	“ “	Digital Dec	TUNE	Encoder

NOTE: **SQ**, ½, **TST** and **DME** button functions are **NOT** modeled

Intentionally Left Blank

WX RADAR MODULE

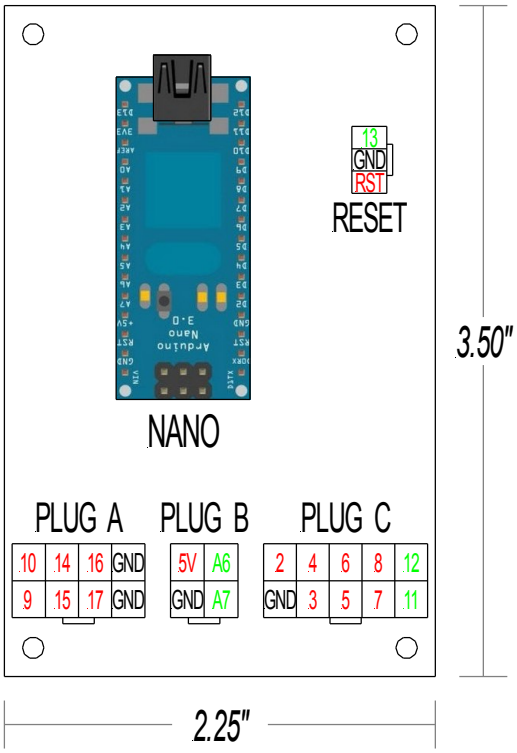

PLUG “A” WX RADAR PANEL BUTTONS:

PIN	DESCRIPTION	SWITCH	ACTION	LEGEND	TYPE
9	“ARROW UP”	OMRON B3F-1055	Momentary	“ARROW UP”	Push
10	“ARROW DN”	OMRON B3F-1055	Momentary	“ARROW DN”	Push
14	TRB	OMRON B3F-1055	Momentary	TRB	Push
15	STAB	OMRON B3F-1055	Momentary	STAB	Push
16	TGT	OMRON B3F-1055	Momentary	TGT	Push
17	SECT	OMRON B3F-1055	Momentary	SECT	Push

PLUG “B” WX RADAR PANEL ANALOG:

PIN	DESCRIPTION	SWITCH	ACTION	LEGEND	TYPE
A6	TILT ADJUST	531-PC16SC-1K	Variable POT	TILT	Analog
A7	GAIN ADJUST	531-PC16SC-1K	Variable POT	GAIN	Analog

NOTE: Pins A6 and A7 are analog pins which require 5V power

PLUG “C” WX RADAR PANEL SELECTOR:

PIN	DESCRIPTION	SWITCH	ACTION	LEGEND	TYPE
2	RADAR OFF	A11215RNZQ	Selector	OFF	Rotary
3	RADAR SBY	“ “	Selector	SBY	Rotary
4	RADAR WX	“ “	Selector	WX	Rotary
5	RADAR RCT	“ “	Selector	RCT	Rotary
6	RADAR GMAP	“ “	Selector	GMAP	Rotary
7	RADAR FP	“ “	Selector	FP	Rotary
8	RADAR TST	“ “	Selector	TST	Rotary
11	OFF LED	N/A	Indicator	OFF	AMBER
12	SLV LED	N/A	Indicator	SLV	AMBER

NOTE: Pins 11 and 12 are for “OFF” and “SLV” LED Indicators

Intentionally Left Blank

JET45 ADVANCED SYSTEMS SOFTWARE

LEFT PANELS MODULE

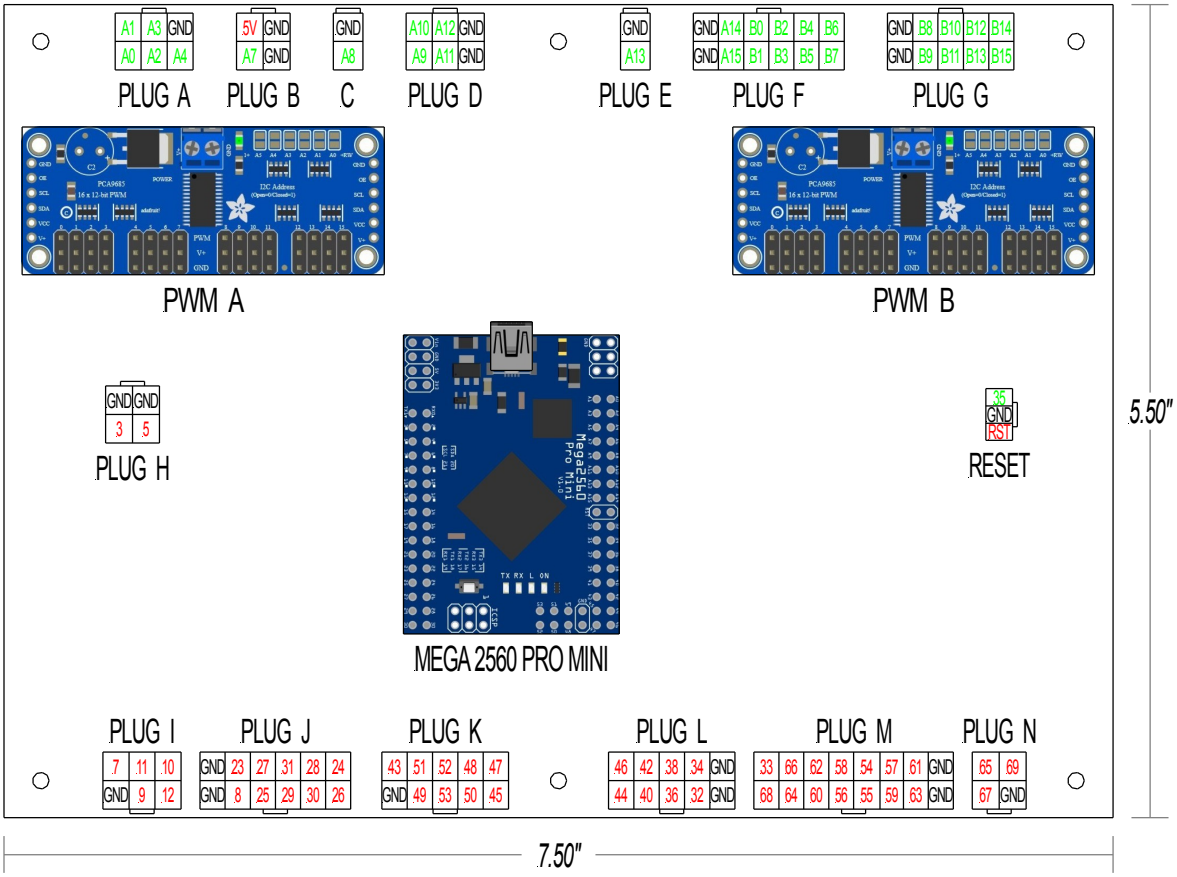

PLUG “A” SYS TEST PANEL S/I LEDs:

PIN	DESCRIPTION	SWITCH	ACTION	LEGEND	COLOR
A0	RADIO CTL HOT BUS	AML21CBA2AC	Momentary	ON	WARM
A1	RUD BOOST	AML21CBA2AD	Alternate	OFF	WARM
A2	GPWS G/S	AML21CBA2AC*	Momentary	OFF	WARM
A3	GPWS FLAP	AML21CBA2AD	Alternate	OFF	WARM
A4	GPWS TERR	AML21CBA2AD	Alternate	OFF	WARM

PLUG “B” LEFT AOA GAUGE SERVO:

PIN	DESCRIPTION	SWITCH	ACTION	LEGEND	COLOR
A7	AOA SERVO SIGNAL	DMS-MG90-A	Mechanical 270*	N/A	N/A

WARNING: Plug “B” is reserved for the Left AOA gauge with a 5V 270* micro servo
DO NOT USE FOR LEDs!

PLUG “C” GPWS INDICATOR S/I LED:

PIN	DESCRIPTION	SWITCH	ACTION	LEGEND	COLOR
A8	GPWS (L FAIL)	AML21CBA2AC	Indicator	GPWS	AMBER

PLUG “D” SPARE LEDs:

PIN	DESCRIPTION	SWITCH	ACTION	LEGEND	COLOR
A9	RESERVED				
A10	RESERVED				
A11	RESERVED				
A12	RESERVED				

PLUG “E” LEFT CREW PANEL S/I LED:

PIN	DESCRIPTION	SWITCH	ACTION	LEGEND	COLOR
A13	AHRS HEADING	AML21CBA2AD	Alternate	FREE	WARM

PLUG “F” ELECTRICAL PANEL (LOW) S/I LEDs:

PIN	DESCRIPTION	SWITCH	ACTION	LEGEND	COLOR
A14	L GEN	AML21CBA2AC	Momentary	OFF	WARM
A15	BUS-TIE (H)	AML21CBA2AC	Momentary	MAN	WARM
B0	BUS-TIE (L)	“ “	“ “	--------	WARM
B1	R GEN	AML21CBA2AC	Momentary	OFF	WARM
B2	EXT PWR (H)	AML21CBA2AC	Momentary	ON	WARM
B3	EXT PWR (L)	“ “	“ “	AVAIL	GREEN
B4	L BATT	AML21CBA2AC	Momentary	OFF	WARM
B5	R BATT	AML21CBA2AC	Momentary	OFF	WARM
B6	APU GEN (H)	AML21CBA2AC	Momentary	ON	WARM
B7	APU GEN (L)	“ “	“ “	AVAIL	GREEN

PLUG "G" ELECTRICAL PANEL (HIGH) S/I LEDs:

PIN	DESCRIPTION	SWITCH	ACTION	LEGEND	COLOR
B8	L AV MSTR	AML21CBA2AD	Alternate	OFF	WARM
B9	EMER BATT (H)	AML21CBA2AD	Alternate	EMER	WARM
B10	EMER BATT (L)	" "	" "	OFF	WARM
B11	R AV MSTR	AML21CBA2AD	Alternate	OFF	WARM
B12	L MAIN	AML21CBA2AC	Momentary	OFF	WARM
B13	L NON-ESS	AML21CBA2AC	Momentary	OFF	WARM
B14	R NON-ESS	AML21CBA2AC	Momentary	OFF	WARM
B15	R MAIN	AML21CBA2AC	Momentary	OFF	WARM

PLUG "H" CREW OXYGEN MASK: (OPTIONAL)

PIN	DESCRIPTION	SWITCH	ACTION	LEGEND	TYPE
3	CAPT PUSH TO TEST	R13-502	Momentary	PUSH TO TEST	Push
5	FO PUSH TO TEST	R13-502	Momentary	PUSH TO TEST	Push

PLUG "I" SYS TEST PANEL SWITCHES:

PIN	DESCRIPTION	SWITCH	ACTION	LEGEND	TYPE
7	RADIO CTL HOT BUS	AML21CBA2AC	Momentary	ON	Push
9	RUD BOOST	AML21CBA2AD	Alternate	OFF	Push
10	GPWS G/S	AML21CBA2AC*	Momentary	OFF	Push
11	GPWS FLAP	AML21CBA2AD	Alternate	OFF	Push
12	GPWS TERR	AML21CBA2AD	Alternate	OFF	Push
N/A	PIT TRIM BIAS	1TL1-7E	(ON)-OFF-(ON)	NDN/NUP	Toggle

NOTE: Pitch Trim Bias toggle is not modeled in software. Mechanical action toggle only!

PLUG "J" SYS TEST / RESET SWITCHES:

PIN	DESCRIPTION	SWITCH	ACTION	LEGEND	TYPE
8	FIRE DET	A11215RNZQ	Selector	FIRE DET	Rotary
23	LTS	" "	" "	LTS	Rotary
24	GEAR	" "	" "	GEAR	Rotary
25	FLAPS	" "	" "	FLAPS	Rotary
26	ADC	" "	" "	ADC	Rotary
27	STALL	" "	" "	STALL	Rotary
28	ANTI-ICE	" "	" "	ANTI-ICE	Rotary
29	GPWS	" "	" "	GPWS	Rotary
30	SPLRN RESET	" "	" "	SPLRN RESET	Rotary
31	FLAP RESET	" "	" "	FLAP RESET	Rotary
N/A	PRESS TEST	MB2411S1W01-HB	Momentary	PRESS TEST	Push

NOTE: PRESS TEST push button closes ground connection to A11215RNZQ rotary selector

PLUG "K" CAPT YOKE MISC. SWITCHES:

PIN	DESCRIPTION	SWITCH	ACTION	LEGEND	TYPE
43	ATC IDENT	C2006 SAFRAN	Momentary	None	Push
45	MASTER SWITCH	26619P-18	Momentary	MSW	Push
47	CHCKLST ADVANCE	C2006 SAFRAN	Momentary	CHKLST ADV	Push
48	TCH CTL STR	C2006 SAFRAN	Momentary	TCS	Push
49	PUSH TO TALK	C2006 SAFRAN	Momentary	None	Push
50	TRIM NOSE DOWN	OTTO T4-0111	Momentary	NOSE DOWN	SPCL
51	TRIM NOSE UP	" "	" "	NOSE UP	SPCL
52	TRIM LW DOWN	" "	" "	LWD	SPCL
53	TRIM RW DOWN	" "	" "	RWD	SPCL

PLUG "L" ELECTRICAL REVERSION SWITCHES:

PIN	DESCRIPTION	SWITCH	ACTION	LEGEND	TYPE
32	IC/SG NORM 1	A12415RNZQ	Selector	1	Rotary
34	IC/SG NORM 2	" "	" "	2	Rotary
36	ADC NORM 1	A12415RNZQ	Selector	1	Rotary
38	ADC NORM 2	" "	" "	2	Rotary
40	AHRS NORM 1	A12415RNZQ	Selector	1	Rotary
42	AHRS NORM 2	" "	" "	2	Rotary
44	DAU NORM A	A12415RNZQ	Selector	A	Rotary
46	DAU NORM B	" "	" "	B	Rotary

PLUG "M" ELECTRICAL PANEL SWITCHES:

PIN	DESCRIPTION	SWITCH	ACTION	LEGEND	TYPE
33	L AV MSTR	AML21CBA2AD	Alternate	OFF	Push
54	EMER BATT	AML21CBA2AD	Alternate	EMER/OFF	Push
55	R AV MSTR	AML21CBA2AD	Alternate	OFF	Push
56	L MAIN	AML21CBA2AC	Momentary	OFF	Push
57	L NON-ESS	AML21CBA2AC	Momentary	OFF	Push
58	R NON-ESS	AML21CBA2AC	Momentary	OFF	Push
59	R MAIN	AML21CBA2AC	Momentary	OFF	Push
60	L GEN	AML21CBA2AC	Momentary	OFF	Push
61	BUS-TIE	AML21CBA2AC	Momentary	MAN/--------	Push
62	R GEN	AML21CBA2AC	Momentary	OFF	Push
63	EXT PWR	AML21CBA2AC	Momentary	ON/AVAIL	Push
64	L BATT	AML21CBA2AC	Momentary	OFF	Push
66	R BATT	AML21CBA2AC	Momentary	OFF	Push
68	APU GEN	AML21CBA2AC	Momentary	ON/AVAIL	Push

PLUG "N" LEFT CREW PANEL SWITCHES:

PIN	DESCRIPTION	SWITCH	ACTION	LEGEND	TYPE
65	AHRS HEADING	AML21CBA2AD	Alternate	FREE	Push
67	AHRS L SLAVE	1TL1-7	(ON)-OFF-(ON)	L	Toggle
69	AHRS R SLAVE	" "	" "	R	Toggle
N/A	RUDDER PEDAL	1TL1-7	(ON)-OFF-(ON)	FWD/AFT	Toggle

NOTE: Rudder Pedal toggle is not modeled in software. Mechanical action toggle only!

Addressing PWM B: Each PWM board in a chain must be assigned a unique address. This is done with the address jumpers on the upper right edge of the PWM board. The default I2C base address for each board is 0x40. The binary address that you program with the address jumpers is added to the base I2C address. To program PWM B address offset, use a drop of solder to bridge A0 or R1 depending on which PCA9685 PWM you have.

(PWM A) Board 0: Address = 0x40 Offset = binary 00000 (no jumpers required)
(PWM B) Board 1: Address = 0x41 Offset = binary 00001 (bridge A0 or R1)

Intentionally Left Blank

RIGHT PANELS MODULE

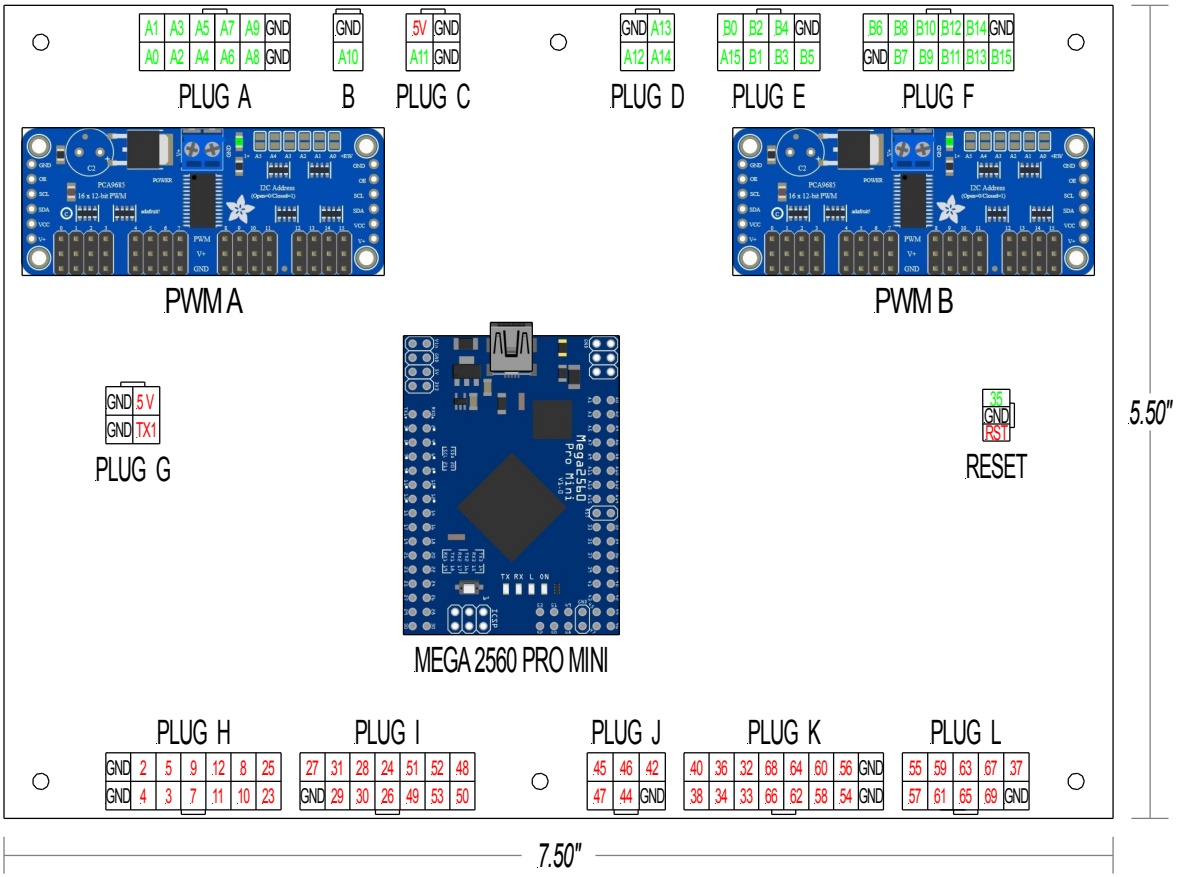

PLUG "A" PRESSURE PANEL S/I LEDs:

PIN	DESCRIPTION	SWITCH	ACTION	LEGEND	COLOR
A0	PAX OXY/AUTO	AML21CBA2AC	Momentary	OFF	WARM
A1	DEPLOY	AML21CBA2AC*	Momentary	[ON]	WARM
A2	EMER PRESS	AML21CBA2AC*	Momentary	[ON]	WARM
A3	PACK	AML21CBA2AD*	Alternate	OFF	WARM
A4	HI-FLOW	AML21CBA2AD*	Alternate	ON	WARM
A5	L BLEED	AML21CBA2AD*	Alternate	OFF	WARM
A6	R BLEED	AML21CBA2AD*	Alternate	OFF	WARM
A7	APU BLEED	AML21CBA2AC	Momentary	ON	WARM
A8	EMER DEPRESS	AML21CBA2AD	Alternate	[ON]	WARM
A9	MANUAL PRESS	AML21CBA2AC	Momentary	ON	WARM

PLUG “B” GPWS INDICATOR S/I LED:

PIN	DESCRIPTION	SWITCH	ACTION	LEGEND	COLOR
A10	GPWS (R FAIL)	AML21CBA2AC	Indicator	GPWS	AMBER

PLUG “C” RIGHT AOA GAUGE SERVO:

PIN	DESCRIPTION	SWITCH	ACTION	LEGEND	COLOR
A11	AOA SERVO SIGNAL	DMS-MG90-A	Mechanical 270*	N/A	N/A

WARNING: Plug “C” is reserved for the Right AOA gauge with a 5V 270* micro servo
DO NOT USE FOR LEDs!

PLUG “D” ENVIRONMENTAL PANEL S/I LEDs:

PIN	DESCRIPTION	SWITCH	ACTION	LEGEND	COLOR
A12	BAG HT	AML21CBA2AD	Alternate	OFF	WARM
A13	MANUAL TEMP	AML21CBA2AD	Alternate	ON	WARM
A14	AHRS HEADING	AML21CBA2AD	Alternate	FREE	WARM

PLUG “E” ANTI-ICE PANEL S/I LEDs:

PIN	DESCRIPTION	SWITCH	ACTION	LEGEND	COLOR
A15	L PROBES	AML21CBA2AD	Alternate	OFF	WARM
B0	R PROBES	AML21CBA2AD	Alternate	OFF	WARM
B1	L WSHLD	AML21CBA2AD	Alternate	OFF	WARM
B2	R WSHLD	AML21CBA2AD	Alternate	OFF	WARM
B3	WING/STAB	AML21CBA2AD	Alternate	ON	WARM
B4	L NAC	AML21CBA2AD	Alternate	ON	WARM
B5	R NAC	AML21CBA2AD	Alternate	ON	WARM

PLUG “F” GEAR/HYD PANEL S/I LEDs:

PIN	DESCRIPTION	SWITCH	ACTION	LEGEND	COLOR
B6	GEAR NOSE (H)	AML21CBA2AC	Indicator	//////////	WHITE
B7	GEAR NOSE (L)	“ “	“ “	DOWN	GREEN
B8	GEAR LEFT (H)	AML21CBA2AC	Indicator	//////////	WHITE
B9	GEAR LEFT (L)	“ “	“ “	DOWN	GREEN
B10	GEAR RIGHT (H)	AML21CBA2AC	Indicator	//////////	WHITE
B11	GEAR RIGHT (L)	“ “	“ “	DOWN	GREEN
B12	NOSE STEER	AML21CBA2AC	Momentary	ON	WARM
B13	ANTI-SKID	AML21CBA2AD*	Alternate	OFF	WARM
B14	AUX HYD	AML21CBA2AC	Momentary	ON	WARM
B15	HYD XFLOW	AML21CBA2AC	Momentary	ON	WARM

PLUG “G” 2.4” LCD PRESSURE DISPLAY:

PIN	DESCRIPTION	SWITCH	ACTION	LEGEND	TYPE
TX1	TRANSFER	NX3224T024	(USE FOR 2.4” LCD PRESSURE DISPLAY)		
5V	5 VOLT POWER				

PLUG “H” GEAR/HYD PANEL (LEFT) SWITCHES:

PIN	DESCRIPTION	SWITCH	ACTION	LEGEND	TYPE
2	LEFT TAXI	2TL1-10	ON-ON-ON	TAXI	Toggle
3	LEFT LDG	“ “	“ “	L LDG	Toggle
4	L PROBES	AML21CBA2AD	Alternate	OFF	Push
5	R PROBES	AML21CBA2AD	Alternate	OFF	Push
7	L WSHLD	AML21CBA2AD	Alternate	OFF	Push
8	R WSHLD	AML21CBA2AD	Alternate	OFF	Push
9	WING/STAB	AML21CBA2AD	Alternate	ON	Push
10	L NAC	AML21CBA2AD	Alternate	ON	Push
11	R NAC	AML21CBA2AD	Alternate	ON	Push
12	NAV/LOGO	2TL1-10	ON-ON-ON	NAV	Toggle
23	WING INSP (PAUSE)	SB4011NOHG-2B	OFF-(ON)	WING INSP	Push
25	EMER LIGHTS ARM	2TL1-1M	ON-OFF-ON	ARM	Toggle

PLUG “I” GEAR/HYD PANEL (RIGHT) SWITCHES:

PIN	DESCRIPTION	SWITCH	ACTION	LEGEND	TYPE
24	PULSE	1TL1-1	ON-OFF-ON	PULSE	Toggle
26	RECOG	“ “	“ “	RECOG	Toggle
27	BCN	2TL1-10	ON-ON-ON	BCN	Toggle
28	BCN/STROBE	“ “	“ “	BCN/STROBE	Toggle
29	RIGHT TAXI	2TL1-10	ON-ON-ON	TAXI	Toggle
30	RIGHT LDG	“ “	“ “	L LDG	Toggle
31	BELTS	2TL1-10	ON-ON-ON	BELTS	Toggle
48	NO SMOKING/BELTS	“ “	“ “	NO SMOKING	Toggle
49	GEAR KNOB	1TL1-2D	OFF-ON	UP	Toggle
50	NOSE STEER	AML21CBA2AC	Momentary	ON	Push
51	ANTI-SKID	AML21CBA2AD*	Alternate	OFF	Push
52	AUX HYD	AML21CBA2AC	Momentary	ON	Push
53	HYD XFLOW	AML21CBA2AC	Momentary	ON	Push

NOTE: R LDG/TAXI toggle is not currently modeled in software. L LDG/TAXI toggle controls both left and right taxi and landing lights!

PLUG “J” ENVIRONMENTAL PANEL SWITCHES:

PIN	DESCRIPTION	SWITCH	ACTION	LEGEND	TYPE
42	BAG HEAT	AML21CBA2AD	Alternate	OFF	Push
44	MANUAL TEMP	AML21CBA2AD	Alternate	ON	Push
45	AHRS HEADING	AML21CBA2AD	Alternate	FREE	Push
46	AHRS SLAVE L	1TL1-7	(ON)-OFF-(ON)	L	Toggle
47	AHRS SLAVE R	“ “	“ “	R	Toggle
N/A	CVR ERASE	SB4011NOHG-2B	OFF-(ON)	ERASE	Push
N/A	RUDDER PEDAL	1TL1-7	(ON)-OFF-(ON)	FWD/AFT	Toggle

NOTE: CVR ERASE is not modeled in software

NOTE: Rudder Pedal toggle is not modeled in software. Mechanical action toggle only!

PLUG “K” PRESSURE PANEL SWITCHES:

PIN	DESCRIPTION	SWITCH	ACTION	LEGEND	TYPE
32	PAX OXY/AUTO	AML21CBA2AC	Momentary	OFF	Push
33	DEPLOY	AML21CBA2AC*	Momentary	[ON]	Push
34	EMER PRESS	AML21CBA2AC*	Momentary	[ON]	Push
36	PACK	AML21CBA2AD*	Alternate	OFF	Push
38	HI FLOW	AML21CBA2AD*	Alternate	ON	Push
40	L BLEED	AML21CBA2AD*	Alternate	OFF	Push
54	R BLEED	AML21CBA2AD*	Alternate	OFF	Push
56	APU BLEED	AML21CBA2AC	Momentary	ON	Push
58	EMER DEPRESS	AML21CBA2AD	Alternate	[ON]	Push
60	MANUAL PRESS	AML21CBA2AC	Momentary	ON	Push
62	LDG ALT UP	EC12E2420801	Digital Inc	UP	Encoder
64	LDG ALT DN	“ “	Digital Dec	DN	Encoder
66	MANUAL UP	EC12E2420801	Digital Inc	UP	Encoder
68	MANUAL DN	“ “	Digital Dec	DN	Encoder

PLUG “L” FO YOKE MISC. SWITCHES:

PIN	DESCRIPTION	SWITCH	ACTION	LEGEND	TYPE
37	ATC IDENT	C2006 SAFRAN	Momentary	None	Push
55	MASTER SWITCH	26619P-18	Momentary	MSW	Push
57	CHCKLST ADVANCE	C2006 SAFRAN	Momentary	CHKLST ADV	Push
59	TCH CTL STR	C2006 SAFRAN	Momentary	TCS	Push
61	PUSH TO TALK	C2006 SAFRAN	Momentary	None	Push
63	TRIM NOSE DOWN	OTTO T4-0111	Momentary	NOSE DOWN	SPCL
65	TRIM NOSE UP	“ “	“ “	NOSE UP	SPCL
67	TRIM LW DOWN	“ “	“ “	LWD	SPCL
69	TRIM RW DOWN	“ “	“ “	RWD	SPCL

Addressing PWM B: Each PWM board in a chain must be assigned a unique address. This is done with the address jumpers on the upper right edge of the PWM board. The default I2C base address for each board is 0x40. The binary address that you program with the address jumpers is added to the base I2C address. To program PWM B address offset, use a drop of solder to bridge A0 or R1 depending on which PCA9685 PWM you have.

(PWM A) Board 0: Address = 0x40 Offset = binary 00000 (no jumpers required)
(PWM B) Board 1: Address = 0x41 Offset = binary 00001 (bridge A0 or R1)

PEDESTAL PANELS MODULE

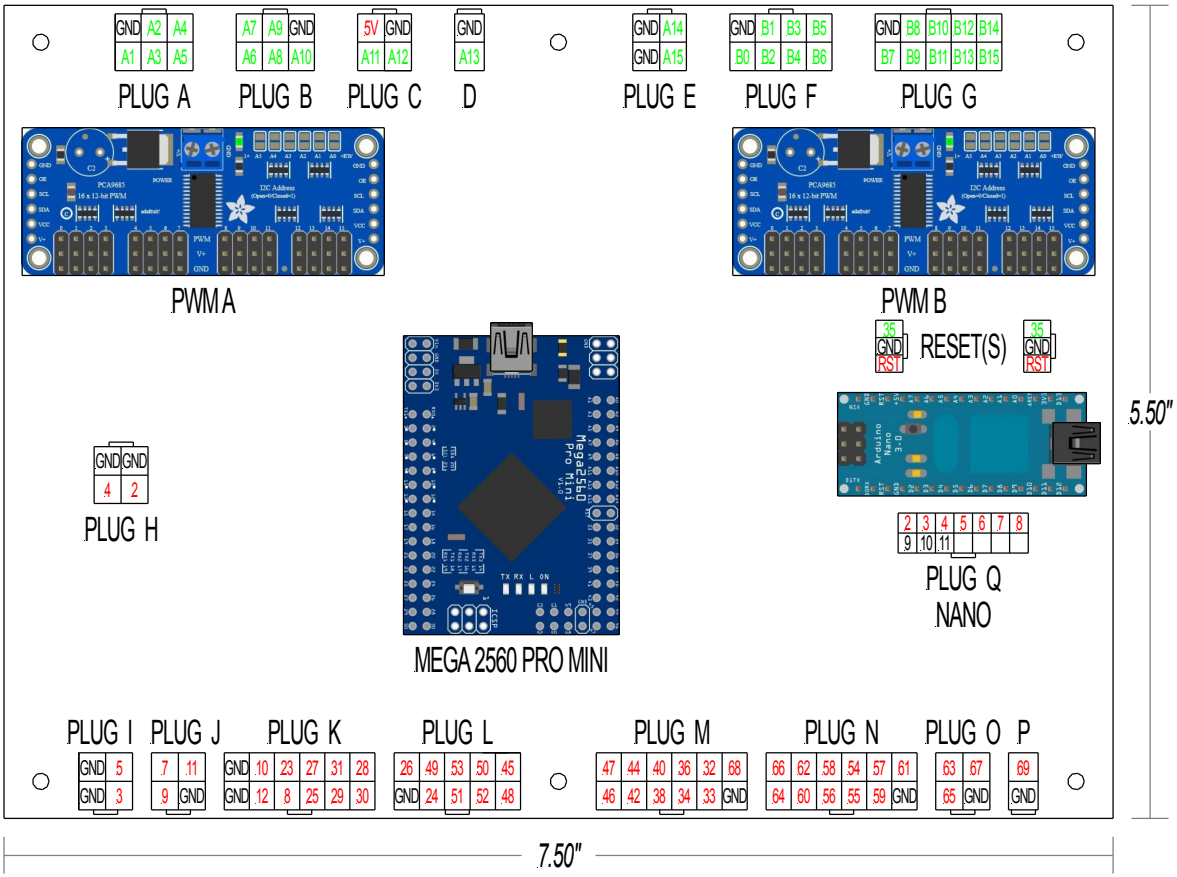

PLUG “A” AIRSHOW PANEL S/I LEDs:

PIN	DESCRIPTION	SWITCH	ACTION	LEGEND	COLOR
A1	“FLTDECK”	N/A	N/A	FLTDECK	GREEN
A2	“FLTDECK”	N/A	N/A	FLTDECK	GREEN
A3	“FLTDECK”	N/A	N/A	FLTDECK	GREEN
A4	“FLTDECK”	N/A	N/A	FLTDECK	GREEN
A5	“ * ”	N/A	N/A	*	GREEN

PLUG “B” APU PANEL S/I LEDs:

PIN	DESCRIPTION	SWITCH	ACTION	LEGEND	COLOR
A6	APU MASTER	AML21CBA2AD	Alternate	ON	WARM
A7	APU FAIL	AML21CBA2AC	Indicator	APU FAIL	AMBER
A8	START/STOP START	AML21CBA2AC	Momentary	START	WARM
A9	START/STOP RUN	“ “	“ “	RUN	GREEN
A10	FIRE PUSH	AML21CBA2AC*	Momentary	[FIRE PUSH]	RED

PLUG “C” SPARE LEDs / SERVO:

PIN	DESCRIPTION	SWITCH	ACTION	LEGEND	COLOR
A11	RESERVED				
A12	RESERVED				

WARNING: Plug “C” can also be used with a 5 volt micro servo. Be aware of the 5V pin!

PLUG “D” ELT PANEL S/I LED:

PIN	DESCRIPTION	SWITCH	ACTION	LEGEND	COLOR
A13	ELT ON	N/A	N/A	N/A	RED

PLUG “E” SEL CAL PANEL S/I LEDs:

PIN	DESCRIPTION	SWITCH	ACTION	LEGEND	COLOR
A14	SEL CAL HF	AML21CBA2AC	Momentary	HF	WARM
A15	SEL CAL VHF	“ “	“ “	VHF	WARM

PLUG “F” ENGINE PANEL (LEFT) S/I LEDs:

PIN	DESCRIPTION	SWITCH	ACTION	LEGEND	COLOR
B0	L EXTINGUISHER #1	AML21CBA2AC	Momentary	[ARMED]	WARM
B1	L EXTINGUISHER #2	AML21CBA2AC	Momentary	[ARMED]	WARM
B2	L ENGINE FIRE (H)	AML21CBA2AD*	Alternate	[CLOSED]	WARM
B3	L ENGINE FIRE (L)	“ “	“ “	[FIRE PUSH]	RED
B4	L ENG START	AML21CBA2AC	Momentary	ON	WARM
B5	L ENG IGNITION	AML21CBA2AD*	Alternate	ON	WARM
B6	FUEL L STANDBY	AML21CBA2AD*	Alternate	ON	WARM

PLUG “G” ENGINE PANEL (RIGHT) S/I LEDs:

PIN	DESCRIPTION	SWITCH	ACTION	LEGEND	COLOR
B7	FUEL XFLOW	AML21CBA2AD*	Alternate	--------	WARM
B8	FUEL R STANDBY	AML21CBA2AD*	Alternate	ON	WARM
B9	APR ARM	AML21CBA2AD	Alternate	ARM	WARM
B10	R ENGINE FIRE (H)	AML21CBA2AD*	Alternate	[CLOSED]	WARM
B11	R ENGINE FIRE (L)	“ “	“ “	[FIRE PUSH]	RED
B12	R EXTINGUISHER #2	AML21CBA2AC	Momentary	[ARMED]	WARM
B13	R EXTINGUISHER #1	AML21CBA2AC	Momentary	[ARMED]	WARM
B14	R ENG IGNITION	AML21CBA2AD*	Alternate	ON	WARM
B15	R ENG START	AML21CBA2AC	Momentary	ON	WARM

PLUG “H” TQ PEDESTAL SWITCHES:

PIN	DESCRIPTION	SWITCH	ACTION	LEGEND	TYPE
2	PITCH DISCONNECT	SS-01GL2	Momentary	N/A	Miniature
4	GEAR FREEFALL	SS-01GL2	Momentary	N/A	Miniature

PLUG “I” ELT PANEL SWITCHES:

PIN	DESCRIPTION	SWITCH	ACTION	LEGEND	TYPE
3	ELT ARM	7203K2ZQE	ON-OFF-ON	ARM	Toggle
5	ELT ON	“ “	“ “	ON	Toggle

PLUG “J” AIRSHOW PANEL SWITCHES:

PIN	DESCRIPTION	SWITCH	ACTION	LEGEND	TYPE
7	SCROLL INCREASE	EC12E2420801	Digital Inc	SCROLL	Encoder
9	SCROLL DECREASE	“ “	Digital Dec	SCROLL	Encoder
11	AIRSHOW SELECT	MML 21HA2AAW	OFF-(ON)	SELECT	Push

PLUG “K” TRIM PANEL SWITCHES:

PIN	DESCRIPTION	SWITCH	ACTION	LEGEND	TYPE
8	LEFT SEC NDN	MASON 309-4301	Momentary	NDN	SPCL
10	LEFT SEC NUP	“ “	“ “	NUP	SPCL
12	RIGHT SEC NDN	“ “	“ “	NDN	SPCL
23	RIGHT SEC NUP	“ “	“ “	NUP	SPCL
25	PITCH TRIM PRI	4TL1-1A	ON-OFF-ON	PRI	Toggle
27	PITCH TRIM SEC	“ “	“ “	SEC	Toggle
28	RUD NOSE LEFT	E3G0603N-2	Momentary	NOSE LEFT	Selector
29	RUD NOSE RIGHT	“ “	“ “	NOSE RIGHT	Selector
30	PIT TRM BIAS LIMIT	SS-01GL2	Momentary	None	Miniature
31	PIT TRM BIAS LIMIT	SS-01GL2	Momentary	None	Miniature

PLUG “L” TQ MODULE SWITCHES:

PIN	DESCRIPTION	SWITCH	ACTION	LEGEND	TYPE
24	LEFT REVERSER	SS-01GL2	Momentary	N/A	Miniature
26	RIGHT REVERSER	SS-01GL2	Momentary	N/A	Miniature
45	LEFT FUEL CUTOFF	SS-01GL2	Momentary	N/A	Miniature
48	RIGHT FUEL CUTOFF	SS-01GL2	Momentary	N/A	Miniature
49	L REVERSE LOCK	SS-01GL2	Momentary	N/A	Miniature
50	R REVERSE LOCK	SS-01GL2	Momentary	N/A	Miniature
51	PARKING BRAKE	SS-01GL2	Momentary	N/A	Miniature
52	GO AROUND	OTTO P7-566222	Momentary	GO AROUND	Push
53	MUTE	OTTO P7-566222	Momentary	MUTE	Push

PLUG “M” ENGINE PANEL (LEFT) SWITCHES:

PIN	DESCRIPTION	SWITCH	ACTION	LEGEND	TYPE
32	L EXTINGUISHER #1	AML21CBA2AC	Momentary	[ARMED]	Push
33	R EXTINGUISHER #2	AML21CBA2AC	Momentary	[ARMED]	Push
34	L ENGINE FIRE	AML21CBA2AD*	Alternate	[CLOSED / FP]	Push
36	L ENG START	AML21CBA2AC	Momentary	ON	Push
38	L ENG IGNITION	AML21CBA2AD*	Alternate	ON	Push
40	L ENG CMPTR ON	1TL1-1A	ON-OFF-ON	ON	Toggle
42	L ENG CMPTR MAN	“ “	“ “	MAN	Toggle
44	FUEL L STANDBY	AML21CBA2AD*	Alternate	ON	Push
46	FUEL XFLOW	AML21CBA2AD*	Alternate	--------	Push
47	FUEL R STANDBY	AML21CBA2AD*	Alternate	ON	Push
68	FUEL USED RESET	SB4011NOHG-2B	OFF-(ON)	None	Push

PLUG “N” ENGINE PANEL (RIGHT) SWITCHES:

PIN	DESCRIPTION	SWITCH	ACTION	LEGEND	TYPE
54	ENTRY DOOR SW	SB4011NOHG-2B	OFF-(ON)	EDS RECORD	Push
55	ENG SYNC N2	1TL1-1	ON-OFF-ON	N2	Toggle
56	ENG SYNC N1	“ “	“ “	N1	Toggle
57	APR ARM	AML21CBA2AD	Alternate	ARM	Push
58	R ENGINE FIRE	AML21CBA2AD*	Alternate	[CLOSED / FP]	Push
59	R EXTINGUISHER #2	AML21CBA2AC	Momentary	[ARMED]	Push
60	R EXTINGUISHER #1	AML21CBA2AC	Momentary	[ARMED]	Push
61	R ENG CMPTR ON	1TL1-1A	ON-OFF-ON	ON	Toggle
62	R ENG CMPTR MAN	“ “	“ “	MAN	Toggle
64	R ENG IGNITION	AML21CBA2AD*	Alternate	ON	Push
66	R ENG START	AML21CBA2AC	Momentary	ON	Push

PLUG “O” APU PANEL SWITCHES:

PIN	DESCRIPTION	SWITCH	ACTION	LEGEND	TYPE
63	APU MASTER	AML21CBA2AD	Alternate	ON	Push
65	START/STOP	AML21CBA2AC	Momentary	START/RUN	Push
67	FIRE PUSH	AML21CBA2AC*	Momentary	[FIRE PUSH]	Push

PLUG “P” SEL CAL PANEL SWITCH:

PIN	DESCRIPTION	SWITCH	ACTION	LEGEND	TYPE
69	SEL CAL	AML21CBA2AC	Momentary	HF/VHF	Push

PLUG “Q” APU AMP DISPLAY:

PIN	DESCRIPTION	7 SEGMENT	ACTION	LEGEND	COLOR
2	SEGMENT “A”	TDSL3160	LED SEG “A” X3	N/A	ORANGE
3	SEGMENT “B”	“ “	LED SEG “B” X3	N/A	ORANGE
4	SEGMENT “C”	“ “	LED SEG “C” X3	N/A	ORANGE
5	SEGMENT “D”	“ “	LED SEG “D” X3	N/A	ORANGE
6	SEGMENT “E”	“ “	LED SEG “E” X3	N/A	ORANGE
7	SEGMENT “F”	“ “	LED SEG “F” X3	N/A	ORANGE
8	SEGMENT “G”	“ “	LED SEG “G” X3	N/A	ORANGE
9	COMMON 1	“ “	MULTIPLEXING	N/A	N/A
10	COMMON 2	“ “	MULTIPLEXING	N/A	N/A
11	COMMON 3	“ “	MULTIPLEXING	N/A	N/A

NOTE: PLUG “Q” is connected to an isolated Arduino Nano to operate the APU AMP Window comprised of three Vishay seven segments displays via Multiplexing.

Addressing PWM B: Each PWM board in a chain must be assigned a unique address. This is done with the address jumpers on the upper right edge of the PWM board. The default I2C base address for each board is 0x40. The binary address that you program with the address jumpers is added to the base I2C address. To program PWM B address offset, use a drop of solder to bridge A0 or R1 depending on which PCA9685 PWM you have.

(PWM A) Board 0: Address = 0x40 Offset = binary 00000 (no jumpers required)
(PWM B) Board 1: Address = 0x41 Offset = binary 00001 (bridge A0 or R1)

Intentionally Left Blank

LEFT ACP MODULE

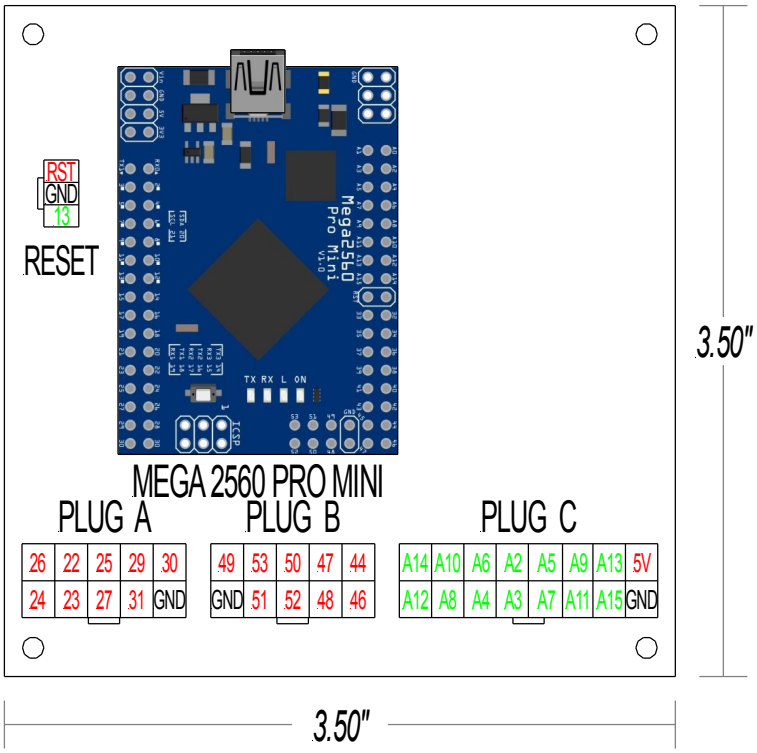

PLUG “A” LEFT ACP (LEFT) BUTTONS:

PIN	DESCRIPTION	SWITCH	ACTION	LEGEND	TYPE
22	VHF1 TRANSMIT	Honeywell OEM	Latching	VHF1	Push
23	VHF2 TRANSMIT	Honeywell OEM	Latching	VHF2	Push
24	HF1 TRANSMIT	Honeywell OEM	Latching	HF1	Push
25	VHF1 SELECT	Honeywell OEM	Latching	VHF1	Push
27	VHF2 SELECT	Honeywell OEM	Latching	VHF2	Push
28	HF1 SELECT	Honeywell OEM	Latching	HF1	Push
29	NAV1 SELECT	Honeywell OEM	Latching	NAV1	Push
30	NAV2 SELECT	Honeywell OEM	Latching	NAV2	Push
31	ADF1 SELECT	Honeywell OEM	Latching	ADF1	Push

PLUG “B” LEFT ACP (RIGHT) BUTTONS:

PIN	DESCRIPTION	SWITCH	ACTION	LEGEND	TYPE
44	PA TRANSMIT	Honeywell OEM	Latching	PA	Push
46	EMER TRANSMIT	Honeywell OEM	Latching	EMER	Push
47	MIC/MASK SELECT	Honeywell OEM	Latching	MIC/MASK	Push
48	DME1/2 SELECT	Honeywell OEM	Latching	DME1/2	Push
49	ID/VOICE SELECT	Honeywell OEM	Latching	ID/VOICE	Push
50	SIDETONE SELECT	Honeywell OEM	Latching	SIDETONE	Push
51	MARKER SELECT	Honeywell OEM	Latching	MKR	Push
52	MUTE LO/HI SENS	Honeywell OEM	Momentary	MUTE	Push
53	INTERPHONE SELECT	Honeywell OEM	Latching	INPH	Push

PLUG “C” LEFT ACP ANALOG POTENIOMETERS:

PIN	DESCRIPTION	SWITCH	ACTION	LEGEND	TYPE
A2	VHF1 ADJUST	Honeywell OEM	Variable POT	VHF1	Analog
A3	VHF2 ADJUST	Honeywell OEM	Variable POT	VHF2	Analog
A4	HF1 ADJUST	Honeywell OEM	Variable POT	HF1	Analog
A5	NAV1 ADJUST	Honeywell OEM	Variable POT	NAV1	Analog
A6	NAV2 ADJUST	Honeywell OEM	Variable POT	NAV2	Analog
A7	ADF1 ADJUST	Honeywell OEM	Variable POT	ADF1	Analog
A8	DME1/2 ADJUST	Honeywell OEM	Variable POT	DME1/2	Analog
A9	ID/VOICE ADJUST	Honeywell OEM	Variable POT	ID/VOICE	Analog
A10	SPEAKER ADJUST	Honeywell OEM	Variable POT	SPEAKER	Analog
A11	SIDETONE ADJUST	Honeywell OEM	Variable POT	SIDETONE	Analog
A12	MARKER ADJUST	Honeywell OEM	Variable POT	MKR	Analog
A13	MUTE ADJUST	Honeywell OEM	Variable POT	MUTE	Analog
A14	INTERPHONE ADJ	Honeywell OEM	Variable POT	INPH	Analog
A15	HEADPHONE ADJ	Honeywell OEM	Variable POT	HEADPHONE	Analog

NOTE: Pins A2 through A15 are analog pins which require 5V power

Intentionally Left Blank

RIGHT ACP MODULE

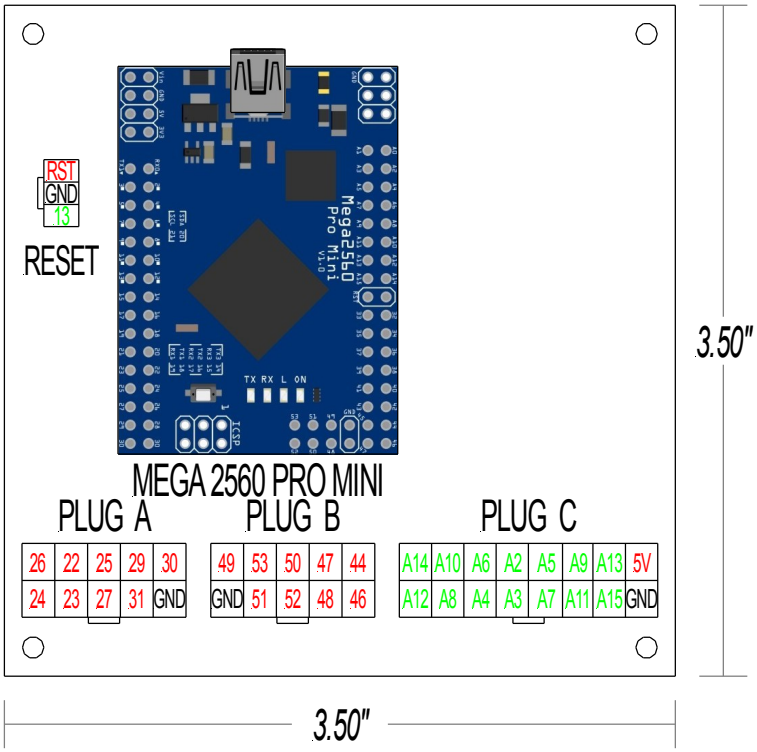

PLUG “A” RIGHT ACP (LEFT) BUTTONS:

PIN	DESCRIPTION	SWITCH	ACTION	LEGEND	TYPE
22	VHF1 TRANSMIT	Honeywell OEM	Latching	VHF1	Push
23	VHF2 TRANSMIT	Honeywell OEM	Latching	VHF2	Push
24	HF1 TRANSMIT	Honeywell OEM	Latching	HF1	Push
25	VHF1 SELECT	Honeywell OEM	Latching	VHF1	Push
27	VHF2 SELECT	Honeywell OEM	Latching	VHF2	Push
28	HF1 SELECT	Honeywell OEM	Latching	HF1	Push
29	NAV1 SELECT	Honeywell OEM	Latching	NAV1	Push
30	NAV2 SELECT	Honeywell OEM	Latching	NAV2	Push
31	ADF1 SELECT	Honeywell OEM	Latching	ADF1	Push

PLUG “B” RIGHT ACP (RIGHT) BUTTONS:

PIN	DESCRIPTION	SWITCH	ACTION	LEGEND	TYPE
44	PA TRANSMIT	Honeywell OEM	Latching	PA	Push
46	EMER TRANSMIT	Honeywell OEM	Latching	EMER	Push
47	MIC/MASK SELECT	Honeywell OEM	Latching	MIC/MASK	Push
48	DME1/2 SELECT	Honeywell OEM	Latching	DME1/2	Push
49	ID/VOICE SELECT	Honeywell OEM	Latching	ID/VOICE	Push
50	SIDETONE SELECT	Honeywell OEM	Latching	SIDETONE	Push
51	MARKER SELECT	Honeywell OEM	Latching	MKR	Push
52	MUTE LO/HI SENS	Honeywell OEM	Momentary	MUTE	Push
53	INTERPHONE SELECT	Honeywell OEM	Latching	INPH	Push

PLUG “C” RIGHT ACP ANALOG POTENIOMETERS:

PIN	DESCRIPTION	SWITCH	ACTION	LEGEND	TYPE
A2	VHF1 ADJUST	Honeywell OEM	Variable POT	VHF1	Analog
A3	VHF2 ADJUST	Honeywell OEM	Variable POT	VHF2	Analog
A4	HF1 ADJUST	Honeywell OEM	Variable POT	HF1	Analog
A5	NAV1 ADJUST	Honeywell OEM	Variable POT	NAV1	Analog
A6	NAV2 ADJUST	Honeywell OEM	Variable POT	NAV2	Analog
A7	ADF1 ADJUST	Honeywell OEM	Variable POT	ADF1	Analog
A8	DME1/2 ADJUST	Honeywell OEM	Variable POT	DME1/2	Analog
A9	ID/VOICE ADJUST	Honeywell OEM	Variable POT	ID/VOICE	Analog
A10	SPEAKER ADJUST	Honeywell OEM	Variable POT	SPEAKER	Analog
A11	SIDETONE ADJUST	Honeywell OEM	Variable POT	SIDETONE	Analog
A12	MARKER ADJUST	Honeywell OEM	Variable POT	MKR	Analog
A13	MUTE ADJUST	Honeywell OEM	Variable POT	MUTE	Analog
A14	INTERPHONE ADJ	Honeywell OEM	Variable POT	INPH	Analog
A15	HEADPHONE ADJ	Honeywell OEM	Variable POT	HEADPHONE	Analog

NOTE: Pins A2 through A15 are analog pins which require 5V power

Intentionally Left Blank

HF RADIO MODULE

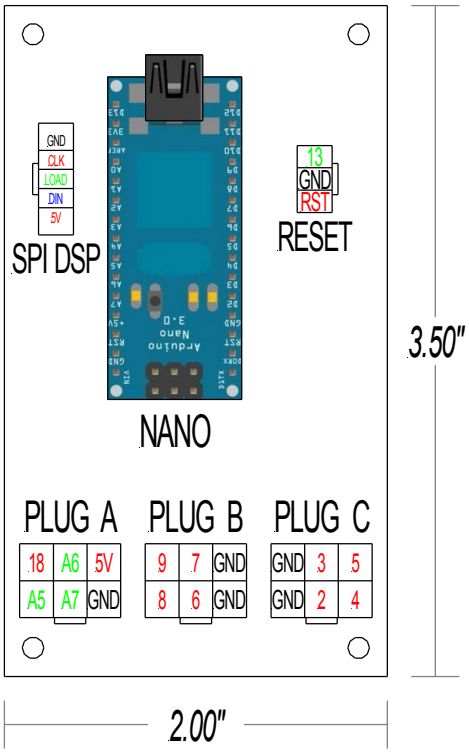

PLUG "A" HF RADIO ANALOG POTENIOMETERS:

PIN	DESCRIPTION	SWITCH	ACTION	LEGEND	TYPE
A5	CLARIFIER	531-PC16SC-1K	Variable POT	VHF1	Analog
A6	SQUELCH	531-PC16SC-1K	Variable POT	VHF1	Analog
A7	VOLUME	*T.B.D.*	Variable POT	VOLUME	Analog
18	VOLUME / OFF	" "	On/OFF	OFF	On/Off

PLUG "B" HF RADIO ENCODERS:

PIN	DESCRIPTION	SWITCH	ACTION	LEGEND	TYPE
6	OUTER INC	EC11EBB24C03	Digital Inc	None	Encoder
7	OUTER DEC	" "	Digital Dec	None	Encoder
8	INNER INC	" "	Digital Inc	None	Encoder
9	INNER DEC	" "	Digital Dec	None	Encoder

PLUG “C” HF RADIO BUTTONS:

PIN	DESCRIPTION	SWITCH	ACTION	LEGEND	TYPE
2	MODE	*T.B.D.*	Momentary	MODE	Push
3	FREQ/CHAN	*T.B.D.*	Latching	FREQ/CHAN	Push
4	STOW	*T.B.D.*	Momentary	STO	Push
5	PROGRAM	*T.B.D.*	Latching	PGM	Push

NOTE: The SPI Display is designed for a custom made eight digit, seven segment display using a MAX2719CNG chip. This display will also handle the LSB, AM, USB, TX and PGM indications.

Intentionally Left Blank

16 RELAY MODULE

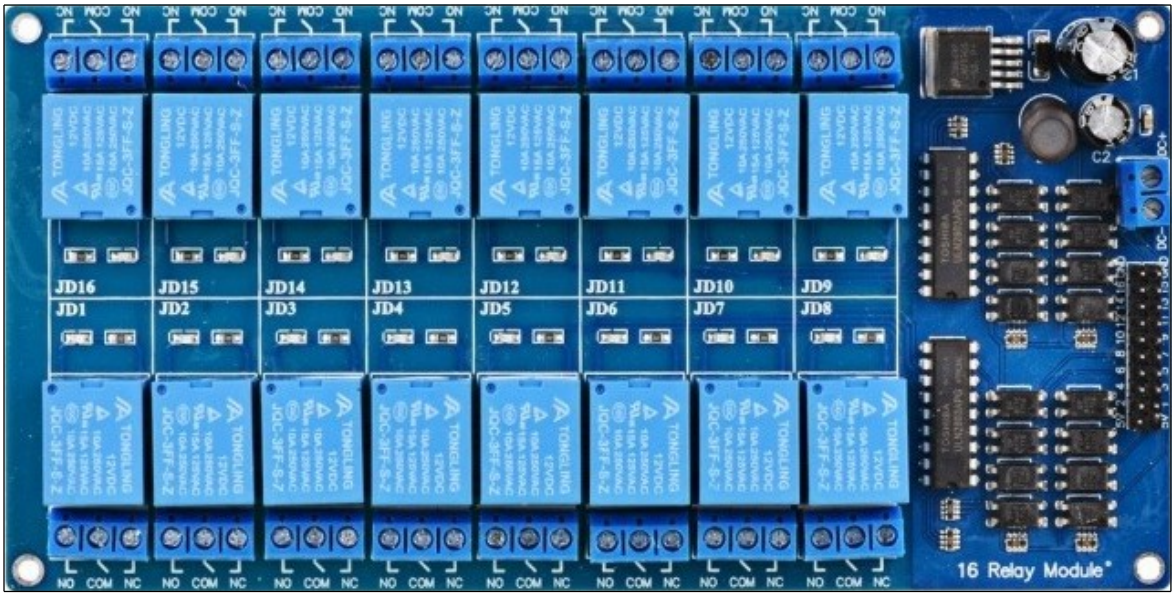

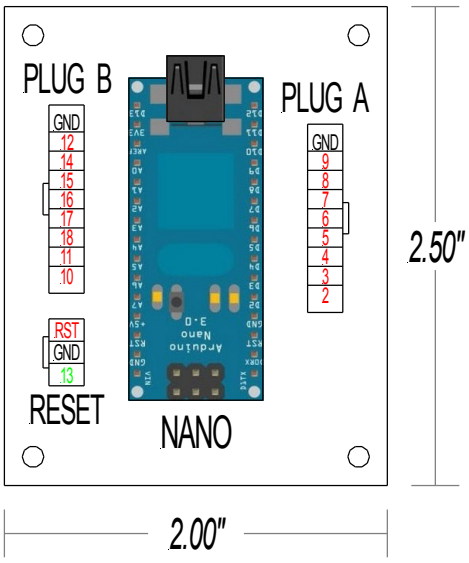

PLUG “A” RELAY MODULE EVEN ROW:

PIN	DESCRIPTION	RELAY	FSUIPC	NOTES
2	L BATTERY SWITCH	2	281C	Monitor pin A10 on Left Module
3	R BATTERY SWITCH	4	281C	Monitor pin A12 on Left Module
4	RADIO CTL HOT BUS	6	N/A	Monitor Pin 7 on Left Panels Module
5	L STALL WARN	8	036C	Monitor Stall Warning status
6	R STALL WARN	10	036C	Monitor Stall Warning status
7	L PRI PITCH	12	N/A	Monitor pin 25 on Pedestal Module
8	R PRI PITCH	14	N/A	Monitor pin 25 on Pedestal Module
9	EMER LIGHTING ARM	16	N/A	Monitor for dual generator failure

PLUG “B” RELAY MODULE ODD ROW:

PIN	DESCRIPTION	RELAY	FSUIPC	NOTES
10	L REVRSE SOLENOID	1	N/A	Monitor pin 49 on Pedestal Module
11	R REVRSE SOLENOID	3	N/A	Monitor pin 50 on Pedestal Module
12	L DAVTRON FT	15	0366	Monitor Weight on Wheels status
14	R DAVTRON FT	13	0366	Monitor Weight on Wheels status
15	HOBBS METER	11	0366	Monitor Weight on Wheels status
16	A/C MANUAL TEMP	9	N/A	Monitor pin A13 on Right Module
17	RESERVED	7		
18	RESERVED	5		

NOTE: The 16 Relay Module enables software simulation to physically control hardware components within the cockpit, in some cases, hardware requiring 5v or 12v power. As an example, lighting, motors, stick shakers, etc.

NOTE: This document is currently a “PRERELEASE DRAFT”. The information, pin assignments and functionality in this document is subject to change during developed!

Intentionally Left Blank

TE CONNECTIVITY PINS & SOCKETS

Vertical Headers solder to the clad boards:

2 PIN VERTICAL HEADER	MFG P/N: 1586037-2
4 PIN VERTICAL HEADER	MFG P/N: 1586037-4
6 PIN VERTICAL HEADER	MFG P/N: 1586037-6
8 PIN VERTICAL HEADER	MFG P/N: 1586037-8
10 PIN VERTICAL HEADER	MFG P/N: 1-1586037-0
12 PIN VERTICAL HEADER	MFG P/N: 1-1586037-2
14 PIN VERTICAL HEADER	MFG P/N: 1-1586037-4
16 PIN VERTICAL HEADER	MFG P/N: 1-1586037-6

Receptacle Housings plug into the Vertical Headers:

2 PIN RECEPTACLE HOUSING	MFG P/N: 794954-2
4 PIN RECEPTACLE HOUSING	MFG P/N: 794954-4
6 PIN RECEPTACLE HOUSING	MFG P/N: 794954-6
8 PIN RECEPTACLE HOUSING	MFG P/N: 794954-8
10 PIN RECEPTACLE HOUSING	MFG P/N: 1-794954-0
12 PIN RECEPTACLE HOUSING	MFG P/N: 1-794954-2
14 PIN RECEPTACLE HOUSING	MFG P/N: 1-794954-4
16 PIN RECEPTACLE HOUSING	MFG P/N: 1-794954-6

Free Hanging Plugs used in wiring harnesses:

2 PIN FREE HANGING PLUG	MFG P/N: 1586000-2
4 PIN FREE HANGING PLUG	MFG P/N: 1586000-4
6 PIN FREE HANGING PLUG	MFG P/N: 1586000-6
8 PIN FREE HANGING PLUG	MFG P/N: 1586000-8
10 PIN FREE HANGING PLUG	MFG P/N: 1-1586000-0
12 PIN FREE HANGING PLUG	MFG P/N: 1-1586000-2
14 PIN FREE HANGING PLUG	MFG P/N: 1-1586000-4
16 PIN FREE HANGING PLUG	MFG P/N: 1-1586000-6

4.2mm Female Pins snap into Receptacle Housings:

Female 4.2mm Pin 22-18AWG	MFG P/N: 1586315-1

4.2mm Male Pins snap into Free Hanging Plugs:

Male 4.2mm Pin 22-18AWG	MFG P/N: 1586314-1

NOTE: All other single and double row pin headers are .1” or 2.54mm pitch