CHAPTER

53

FUSELAGE

Record of Temporary Revisions

Revision Number	Status	Date	Location	Insertion Date	Inserter's Initials	Removal Date	Removers Initials
53-1	Inactive	Jun 16/00	53-10-15 Pg. 101	Jun 16/00	LJ	Nov 07/03	LJ

Chapter Section Subject	Page	Date
53-Title		
53-RTR	1	Nov 07/03
*53-List of Eff. Pgs.	1	Mar 14/05
*53-List of Eff. Pgs.	2	Mar 14/05
*53-List of Eff. Pgs.	3	Mar 14/05
*53-List of Eff. Pgs.	4	Mar 14/05
*53-Contents	1	Mar 14/05
*53-Contents	2	Mar 14/05
*53-Contents	3	Mar 14/05
*53-Contents	4	Mar 14/05
53-00-00	1	Nov 07/03
53-00-00	2	Nov 07/03
53-10-00	1	Nov 07/03
53-10-00	2	Nov 07/03
53-10-01	1	Nov 07/03
53-10-01	2	Nov 07/03
53-10-01	3	Nov 07/03
53-10-01	4	Nov 07/03
53-10-01	5	Nov 07/03
53-10-01	6	Nov 07/03
53-10-01	7	Nov 07/03
53-10-01	101	Nov 07/03
53-10-01	102	Nov 07/03
53-10-01	201	Nov 07/03
53-10-02	1	Nov 07/03
53-10-02	2	Nov 07/03
53-10-02	3	Nov 07/03
53-10-02	4	Nov 07/03
53-10-02	5	Nov 07/03
53-10-02	6	Nov 07/03
53-10-02	7	Nov 07/03
53-10-02	8	Nov 07/03
53-10-02	9	Nov 07/03
53-10-02	10	Nov 07/03
53-10-02	11	Nov 07/03
53-10-02	12	Nov 07/03
53-10-02	13	Nov 07/03
53-10-02	101	Nov 07/03
53-10-02	102	Nov 07/03
53-10-02	201	Nov 07/03
53-10-03	1	Nov 07/03
53-10-03	2	Nov 07/03
53-10-03	3	Nov 07/03
53-10-03	4	Nov 07/03
53-10-03	5	Nov 07/03
53-10-03	6	Nov 07/03
53-10-03	7	Nov 07/03
53-10-03	8	Nov 07/03
53-10-03	9	Nov 07/03
53-10-03	10	Nov 07/03
53-10-03	11	Nov 07/03
53-10-03	12	Nov 07/03
53-10-03	13	Nov 07/03
53-10-03	14	Nov 07/03
53-10-03	15	Nov 07/03
53-10-03	16	Nov 07/03
53-10-03	17	Nov 07/03
53-10-03	18	Nov 07/03
53-10-03	19	Nov 07/03
53-10-03	20	Nov 07/03
53-10-03	101	Nov 07/03
53-10-03	102	Nov 07/03
53-10-03	201	Nov 07/03
53-10-05	1	Nov 07/03
53-10-05	2	Nov 07/03
53-10-05	3	Nov 07/03
53-10-05	4	Nov 07/03
53-10-05	5	Nov 07/03
53-10-05	6	Nov 07/03
53-10-05	101	Nov 07/03
53-10-05	102	Nov 07/03
53-10-05	201	Nov 07/03
53-10-10	1	Nov 07/03
53-10-10	2	Nov 07/03
53-10-10	3	Nov 07/03
53-10-10	4	Nov 07/03
53-10-10	101	Nov 07/03
53-10-10	102	Nov 07/03
53-10-10	201	Nov 07/03
53-10-15	1	Nov 07/03
53-10-15	2	Nov 07/03
53-10-15	3	Nov 07/03
53-10-15	101	Nov 07/03
53-10-15	102	Nov 07/03
53-10-15	201	Nov 07/03
53-20-00	1	Nov 07/03
53-20-00	2	Nov 07/03
53-20-00	3	Nov 07/03

Chapter Section Subject	Page	Date	Chapter Section Subject	Page	Date
53-20-00	4	Nov 07/03	53-20-20	1	Nov 07/03
53-20-00	5	Nov 07/03	53-20-20	2	Nov 07/03
53-20-00	6	Nov 07/03	53-20-20	3	Nov 07/03
53-20-00	7	Nov 07/03	53-20-20	4	Nov 07/03
53-20-00	8	Nov 07/03	53-20-20	5	Nov 07/03
53-20-00	9	Nov 07/03	53-20-20	6	Nov 07/03
53-20-00	10	Nov 07/03	53-20-20	7	Nov 07/03
53-20-00	11	Nov 07/03	53-20-20	8	Nov 07/03
53-20-00	12	Nov 07/03	53-20-20	9	Nov 07/03
53-20-00	13	Nov 07/03	53-20-20	10	Nov 07/03
53-20-00	14	Nov 07/03	53-20-20	101	Nov 07/03
53-20-00	15	Nov 07/03	53-20-20	102	Nov 07/03
53-20-00	16	Nov 07/03	53-20-20	201	Nov 07/03
53-20-00	17	Nov 07/03	53-20-40	1	Nov 07/03
53-20-00	18	Nov 07/03	53-20-40	2	Nov 07/03
53-20-00	19	Nov 07/03	53-20-40	3	Nov 07/03
53-20-00	20	Nov 07/03	53-20-40	4	Nov 07/03
53-20-00	21	Nov 07/03	53-20-40	101	Nov 07/03
53-20-00	22	Nov 07/03	53-20-40	102	Nov 07/03
53-20-00	23	Nov 07/03	53-20-40	201	Nov 07/03
53-20-00	24	Nov 07/03	53-30-00	1	Nov 07/03
53-20-00	25	Nov 07/03	53-30-00	2	Nov 07/03
53-20-00	26	Nov 07/03	53-30-00	3	Nov 07/03
53-20-00	27	Nov 07/03	53-30-00	4	Nov 07/03
53-20-00	28	Nov 07/03	53-30-00	5	Nov 07/03
53-20-00	29	Nov 07/03	53-30-00	6	Nov 07/03
53-20-00	30	Nov 07/03	53-30-00	7	Nov 07/03
53-20-00	31	Nov 07/03	53-30-00	8	Nov 07/03
53-20-00	32	Nov 07/03	53-30-00	9	Nov 07/03
53-20-00	33	Nov 07/03	53-30-00	10	Nov 07/03
53-20-00	34	Nov 07/03	53-30-00	11	Nov 07/03
53-20-00	101	Nov 07/03	53-30-00	12	Nov 07/03
53-20-00	102	Nov 07/03	53-30-00	13	Nov 07/03
53-20-00	201	Nov 07/03	53-30-00	14	Nov 07/03
53-20-10	1	Nov 07/03	53-30-00	15	Nov 07/03
53-20-10	2	Nov 07/03	53-30-00	16	Nov 07/03
53-20-10	3	Nov 07/03	53-30-00	17	Nov 07/03
53-20-10	4	Nov 07/03	53-30-00	18	Nov 07/03
53-20-10	5	Nov 07/03	53-30-00	19	Nov 07/03
53-20-10	6	Nov 07/03	53-30-00	20	Nov 07/03
53-20-10	7	Nov 07/03	53-30-00	21	Nov 07/03
53-20-10	101	Nov 07/03	53-30-00	22	Nov 07/03
53-20-10	102	Nov 07/03	53-30-00	23	Nov 07/03
53-20-10	201	Nov 07/03	53-30-00	24	Nov 07/03

Chapter Section Subject	Page	Date	Chapter Section Subject	Page	Date
53-30-00	25	Nov 07/03	53-30-40	101	Nov 07/03
53-30-00	26	Nov 07/03	53-30-40	102	Nov 07/03
53-30-00	27	Nov 07/03	53-30-40	201	Nov 07/03
53-30-00	28	Nov 07/03	*53-34-10	1	Mar 14/05
53-30-00	29	Nov 07/03	*53-34-10	2	Mar 14/05
53-30-00	30	Nov 07/03	*53-34-10	3	Mar 14/05
53-30-00	31	Nov 07/03	*53-34-10	101	Mar 14/05
53-30-00	32	Nov 07/03	*53-34-10	102	Mar 14/05
53-30-00	33	Nov 07/03	*53-34-10	201	Mar 14/05
53-30-00	34	Nov 07/03	53-40-00	1	Nov 07/03
53-30-00	35	Nov 07/03	53-40-00	2	Nov 07/03
53-30-00	36	Nov 07/03	53-40-00	3	Nov 07/03
53-30-00	37	Nov 07/03	53-40-00	4	Nov 07/03
53-30-00	38	Nov 07/03	53-40-00	5	Nov 07/03
53-30-00	39	Nov 07/03	53-40-00	6	Nov 07/03
53-30-00	40	Nov 07/03	53-40-00	7	Nov 07/03
53-30-00	41	Nov 07/03	53-40-00	8	Nov 07/03
53-30-00	42	Nov 07/03	53-40-00	9	Nov 07/03
53-30-00	43	Nov 07/03	53-40-00	10	Nov 07/03
53-30-00	44	Nov 07/03	53-40-00	11	Nov 07/03
53-30-00	45	Nov 07/03	53-40-00	12	Nov 07/03
53-30-00	46	Nov 07/03	53-40-00	13	Nov 07/03
53-30-00	101	Nov 07/03	53-40-00	14	Nov 07/03
53-30-00	102	Nov 07/03	53-40-00	15	Nov 07/03
53-30-00	201	Nov 07/03	53-40-00	16	Nov 07/03
53-30-10	1	Nov 07/03	53-40-00	17	Nov 07/03
53-30-10	2	Nov 07/03	53-40-00	18	Nov 07/03
53-30-10	3	Nov 07/03	53-40-00	19	Nov 07/03
53-30-10	4	Nov 07/03	53-40-00	20	Nov 07/03
53-30-10	5	Nov 07/03	53-40-00	21	Nov 07/03
53-30-10	101	Nov 07/03	53-40-00	22	Nov 07/03
53-30-10	102	Nov 07/03	53-40-00	23	Nov 07/03
53-30-10	201	Nov 07/03	53-40-00	24	Nov 07/03
53-30-20	1	Nov 07/03	53-40-00	25	Nov 07/03
53-30-20	2	Nov 07/03	53-40-00	26	Nov 07/03
53-30-20	3	Nov 07/03	53-40-00	27	Nov 07/03
53-30-20	4	Nov 07/03	53-40-00	28	Nov 07/03
53-30-20	5	Nov 07/03	53-40-00	29	Nov 07/03
53-30-20	101	Nov 07/03	53-40-00	30	Nov 07/03
53-30-20	102	Nov 07/03	53-40-00	31	Nov 07/03
53-30-20	201	Nov 07/03	53-40-00	32	Nov 07/03
53-30-40	1	Nov 07/03	53-40-00	33	Nov 07/03
53-30-40	2	Nov 07/03	53-40-00	34	Nov 07/03
53-30-40	3	Nov 07/03	53-40-00	35	Nov 07/03

Chapter Section Subject	Page	Date	Chapter Section Subject	Page	Date
53-40-00	36	Nov 07/03			
53-40-00	37	Nov 07/03			
53-40-00	38	Nov 07/03			
53-40-00	39	Nov 07/03			
53-40-00	40	Nov 07/03			
53-40-00	41	Nov 07/03			
53-40-00	101	Nov 07/03			
53-40-00	102	Nov 07/03			
53-40-00	201	Nov 07/03			
53-40-10	1	Nov 07/03			
53-40-10	2	Nov 07/03			
53-40-10	3	Nov 07/03			
53-40-10	4	Nov 07/03			
53-40-10	101	Nov 07/03			
53-40-10	102	Nov 07/03			
53-40-10	201	Nov 07/03			
53-40-20	1	Nov 07/03			
53-40-20	2	Nov 07/03			
53-40-20	3	Nov 07/03			
53-40-20	4	Nov 07/03			
53-40-20	101	Nov 07/03			
53-40-20	102	Nov 07/03			
53-40-20	201	Nov 07/03			
53-40-40	1	Nov 07/03			
53-40-40	2	Nov 07/03			
53-40-40	3	Nov 07/03			
53-40-40	101	Nov 07/03			
53-40-40	102	Nov 07/03			
53-40-40	201	Nov 07/03			

Subject	Chapter Section Subject	Page
FUSELAGE - STRUCTURAL IDENTIFICATION		
Description	53-00-00	1
FORWARD FUSELAGE ASSEMBLY - STRUCTURAL IDENTIFICATION		
Description	53-10-00	1
NOSE FUSELAGE STRUCTURE - STRUCTURAL IDENTIFICATION		
Description	53-10-01	1
NOSE FUSELAGE STRUCTURE - ALLOWABLE DAMAGE		
Allowable Damage Limits	53-10-01	101
NOSE FUSELAGE STRUCTURE - REPAIR		
Repairs	53-10-01	201
NOSE EXTENSION STRUCTURE - STRUCTURAL IDENTIFICATION		
Description	53-10-02	1
NOSE EXTENSION STRUCTURE - ALLOWABLE DAMAGE		
Allowable Damage Limits	53-10-02	101
NOSE EXTENSION STRUCTURE - REPAIR		
Repairs	53-10-02	201
FLIGHT DECK STRUCTURE - STRUCTURAL IDENTIFICATION		
Description	53-10-03	1
FLIGHT DECK STRUCTURE - ALLOWABLE DAMAGE		
Allowable Damage Limits	53-10-03	101
FLIGHT DECK STRUCTURE - REPAIR		
Repairs	53-10-03	201
FORWARD FUSELAGE FRAMES - STRUCTURAL IDENTIFICATION		
Description	53-10-05	1
FORWARD FUSELAGE FRAMES - ALLOWABLE DAMAGE		
Allowable Damage Limits	53-10-05	101
FORWARD FUSELAGE FRAMES - REPAIR		
Repairs	53-10-05	201
FORWARD FUSELAGE STRINGERS - STRUCTURAL IDENTIFICATION		
Description	53-10-10	1
FORWARD FUSELAGE STRINGERS - ALLOWABLE DAMAGE		
Allowable Damage Limits	53-10-10	101
FORWARD FUSELAGE STRINGERS - REPAIR		
Repairs	53-10-10	201

Subject	Chapter Section Subject	Page
FORWARD FUSELAGE SKINS - STRUCTURAL IDENTIFICATION		
Description	53-10-15	1
FORWARD FUSELAGE SKINS - ALLOWABLE DAMAGE		
Allowable Damage Limits	53-10-15	101
FORWARD FUSELAGE SKINS - REPAIR		
Repairs	53-10-15	201
CENTER FUSELAGE ASSEMBLY - STRUCTURAL IDENTIFICATION		
Description	53-20-00	1
CENTER FUSELAGE ASSEMBLY - ALLOWABLE DAMAGE		
Allowable Damage Limits	53-20-00	101
CENTER FUSELAGE ASSEMBLY - REPAIR		
Repairs	53-20-00	201
CENTER FUSELAGE FRAMES - STRUCTURAL IDENTIFICATION		
Description	53-20-10	1
CENTER FUSELAGE FRAMES - ALLOWABLE DAMAGE		
Allowable Damage Limits	53-20-10	101
CENTER FUSELAGE FRAMES - REPAIR		
Repairs	53-20-10	201
CENTER FUSELAGE STRINGERS - STRUCTURAL IDENTIFICATION		
Description	53-20-20	1
CENTER FUSELAGE STRINGERS - ALLOWABLE DAMAGE		
Allowable Damage Limits	53-20-20	101
CENTER FUSELAGE STRINGERS - REPAIR		
Repairs	53-20-20	201
CENTER FUSELAGE SKINS - STRUCTURAL IDENTIFICATION		
Description	53-20-40	1
CENTER FUSELAGE SKINS - ALLOWABLE DAMAGE		
Allowable Damage Limits	53-20-40	101
CENTER FUSELAGE SKINS - REPAIR		
Repairs	53-20-40	201
FUSELAGE FUEL CELL ASSEMBLY - STRUCTURAL IDENTIFICATION		
Description	53-30-00	1
FUSELAGE FUEL CELL ASSEMBLY - ALLOWABLE DAMAGE		
Allowable Damage Limits	53-30-00	101

Subject	Chapter Section Subject	Page
FUSELAGE FUEL CELL ASSEMBLY - REPAIR		
Repairs	53-30-00	201
FUSELAGE FUEL CELL FRAME - STRUCTURAL IDENTIFICATION		
Description	53-30-10	1
FUSELAGE FUEL CELL FRAMES - ALLOWABLE DAMAGE		
Allowable Damage Limits	53-30-10	101
FUSELAGE FUEL CELL FRAMES - REPAIR		
Repairs	53-30-10	201
FUSELAGE FUEL CELL STRINGERS - STRUCTURAL IDENTIFICATION		
Description	53-30-20	1
FUSELAGE FUEL CELL STRINGERS - REPAIR		
Allowable Damage Limits	53-30-20	101
FUSELAGE FUEL CELL STRINGERS - REPAIR		
Repairs	53-30-20	201
FUSELAGE FUEL CELL SKINS - STRUCTURAL IDENTIFICATION		
Description	53-30-40	1
FUSELAGE FUEL CELL SKINS - ALLOWABLE DAMAGE		
Allowable Damage Limits	53-30-40	101
FUSELAGE FUEL CELL SKINS - REPAIR		
Repairs	53-30-40	201
DELTA FIN ASSEMBLY - STRUCTURAL IDENTIFICATION		
Description	53-34-10	1
DELTA FIN ASSEMBLY - ALLOWABLE DAMAGE		
Allowable Damage Limits	53-34-10	101
DELTA FIN ASSEMBLY - REPAIR		
Repairs	53-34-10	201
AFT FUSELAGE ASSEMBLY - STRUCTURAL IDENTIFICATION		
Description	53-40-00	1
AFT FUSELAGE ASSEMBLY - ALLOWABLE DAMAGE		
Allowable Damage Limits	53-40-00	101
AFT FUSELAGE ASSEMBLY - REPAIR		
Repairs	53-40-00	201

Subject	Chapter Section Subject	Page
AFT FUSELAGE FRAMES - STRUCTURAL IDENTIFICATION		
Description	53-40-10	1
AFT FUSELAGE FRAMES - ALLOWABLE DAMAGE		
Allowable Damage Limits	53-40-10	101
AFT FUSELAGE FRAMES - REPAIR		
Repairs	53-40-10	201
AFT FUSELAGE STRINGERS - STRUCTURAL IDENTIFICATION		
Description	53-40-20	1
AFT FUSELAGE STRINGERS - ALLOWABLE DAMAGE		
Allowable Damage Limits	53-40-20	101
AFT FUSELAGE STRINGERS - REPAIR		
Repairs	53-40-20	201
AFT FUSELAGE SKINS - STRUCTURAL IDENTIFICATION		
Description	53-40-40	1
AFT FUSELAGE SKINS - ALLOWABLE DAMAGE		
Allowable Damage Limits	53-40-40	101
AFT FUSELAGE SKINS - REPAIR		
Repairs	53-40-40	201

FUSELAGE - STRUCTURAL IDENTIFICATION

1. Description

NOTE: The following structural data covers the basic non-modified aircraft. When applicable, refer to the appropriate Service Bulletin for additions, modifications and changes to the structural components and assemblies.

A. The fuselage is of a semimonocoque construction consisting of a stressed skin structure with transverse frames and longerons. The skins are of clad aluminum. All surfaces in the structural shell from the forward pressure bulkhead to the aft pressure bulkhead are assembled with a faying surface seal, to minimize fretting and electrolytic corrosion, as well as to prevent leakage. All access panels, doors and cutouts are reinforced as required to carry the loads and compensate for any stress concentration factors.

B. The fuselage has four major zones. (See Figure 1.)
   (1) Forward Fuselage Assembly (53-10-00)
      (a) *On aircraft 45-001 and subsequent*: The forward fuselage assembly extends from just behind the radome to FS 219. This area contains the forward avionics bay, oxygen bottle, and cockpit area. The radome attaches just forward of the avionics bay.
      (b) *On aircraft 45-2001 and subsequent:* The forward fuselage assembly extends from just behind the radome to FS 244. This area contains the forward avionics bay, oxygen bottle, and cockpit area. The radome attaches just forward of the avionics bay.
   (2) Center Fuselage Assembly (53-20-00)
      (a) *On aircraft 45-001 and subsequent*: The center fuselage assembly extends from FS 219 to FS 451. This area contains the passenger areas and extends to the aft pressure bulkhead.
      (b) *On aircraft 45-2001 and subsequent*: The center fuselage assembly extends from FS244 to FS 451. This area contains the passenger areas and extends to the aft pressure bulkhead.
   (3) Fuselage Fuel Cell Assembly (53-30-00)
      (a) The fuselage fuel cell assembly extends from FS 451 to FS 504. This area contains the bladders for the fuselage fuel tanks.
   (4) Aft Fuselage Assembly (53-40-00)
      (a) The aft fuselage assembly extends from FS 504 to FS 614. This area contains the aft baggage, aft electronics, avionics bay, hydraulic equipment/plumbing, and pneumatic/air conditioning/APU bays.

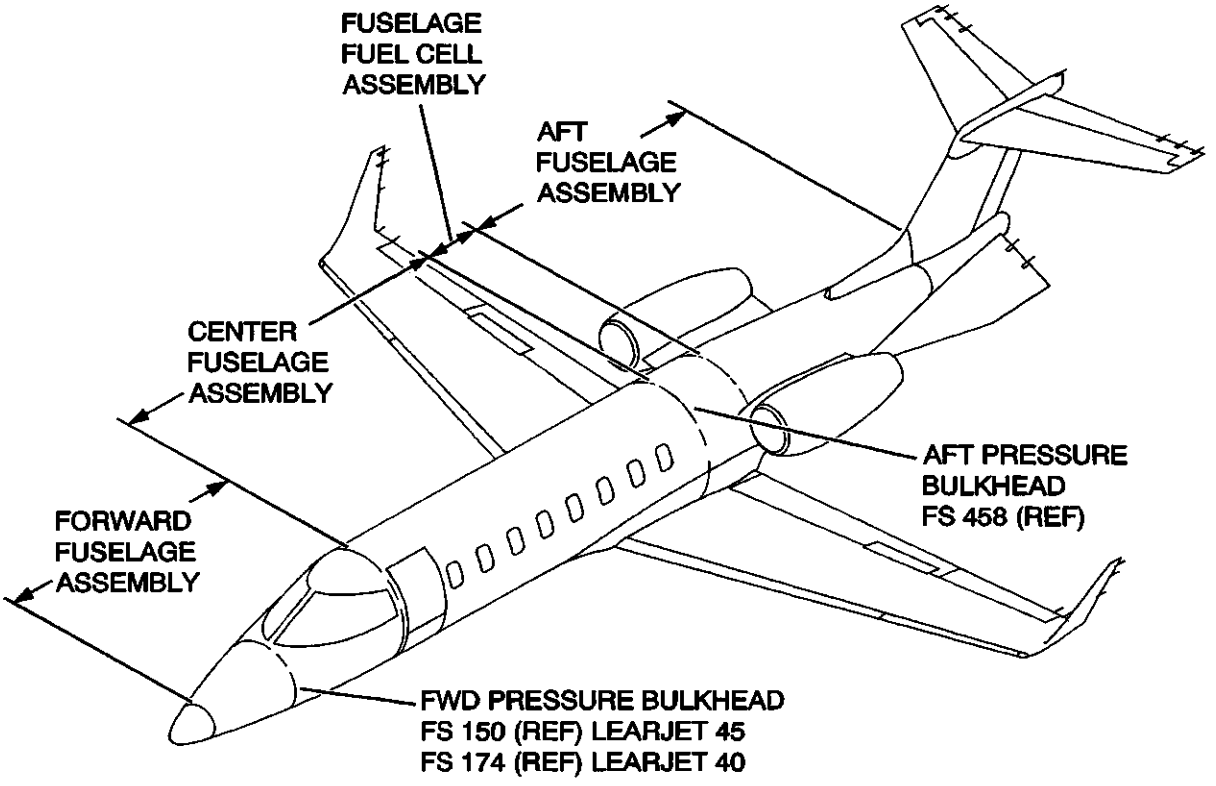

S45-530000-001-01

Fuselage Locator
Figure 1

FORWARD FUSELAGE ASSEMBLY - STRUCTURAL IDENTIFICATION

1. Description (See Figure 1.)

A. *On aircraft 45-001 and subsequent*: The forward fuselage consists of the structure assembly from FS 99 to FS 219. The structure consist of sixteen major bulkhead/frame assemblies (including the forward pressure bulkhead at FS 149), stringers, skins and minor structural sub assemblies. They are broken down into major subsections of: upper and lower nose extension panel assemblies, lower flight deck panel assembly, and flight deck canopy assembly.

B. *On aircraft 45-2001 and subsequent*: The forward fuselage consist of the structure assembly from FS 124 to FS 244. The structure consist of sixteen major bulkhead/frame assemblies (including the forward pressure bulkhead at FS 174), stringers, skins and minor structural sub assemblies. They are broken down into major subsections of: upper and lower nose extension panel assemblies, lower flight deck panel assembly, and flight deck canopy assembly.

C. The forward fuselage assembly provides mounting provisions for various avionics and radio equipment, various aircraft systems, and storage for the nose landing gear when retracted. The avionics access doors are incorporated to provide an aerodynamic configuration and protection of the equipment installed within the forward fuselage assembly. Two nose landing gear doors complete the aerodynamic configuration on the lower side of the forward fuselage and also provide protection for the nose gear. (Refer to Chapter 52 for additional information pertaining to the forward avionics doors and the nose landing doors.)

D. The forward fuselage assembly is made up of three primary sections: the Nose Fuselage Structure (53-10-01), Nose Extension Structure (53-10-02), and Flight Deck Structure (53-10-03).

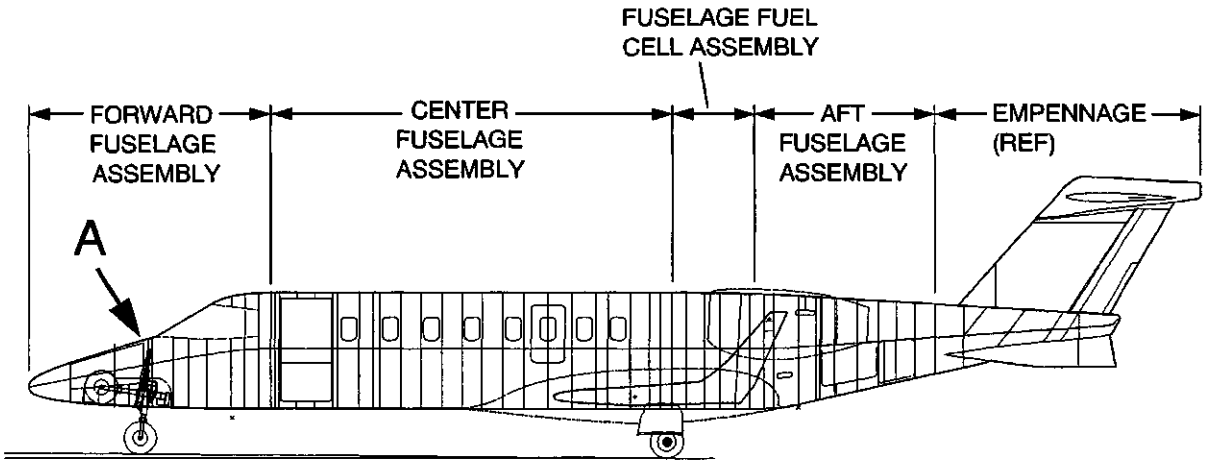

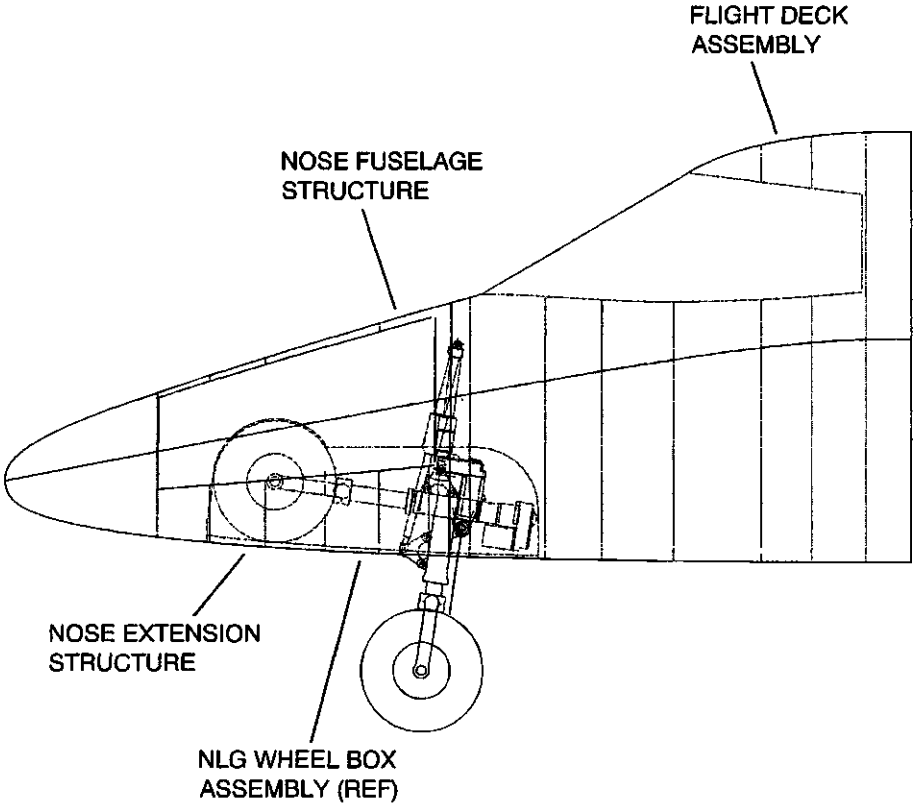

Detail A

Forward Fuselage Assembly Locator

Figure 1

S45-531000-001-01

NOSE FUSELAGE STRUCTURE

1. Nose Fuselage Structure Repair Index (See Figure 1 and Table 1.)

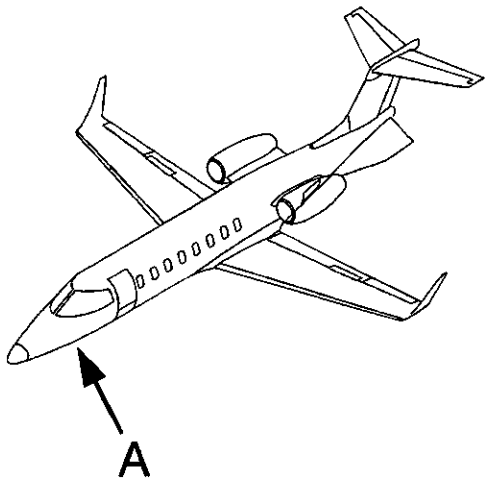

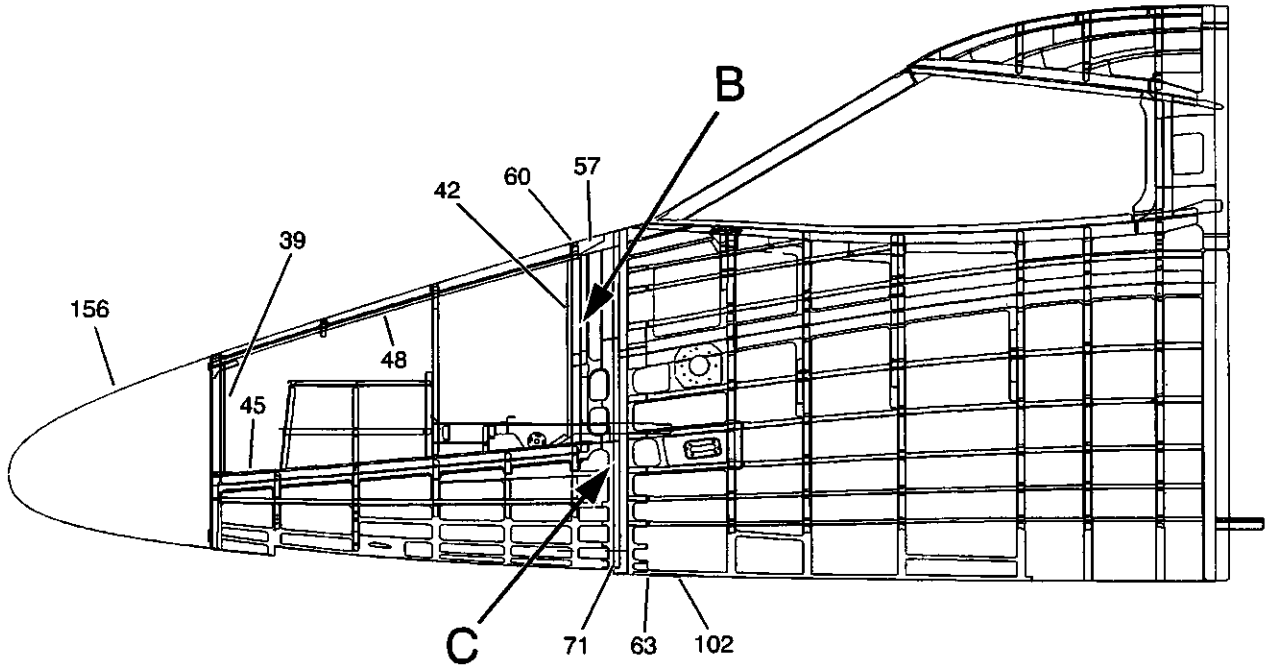

Detail A

S45-531001-001-01

Nose Fuselage Structure Repair Index
Figure 1 (Sheet 1 of 3)

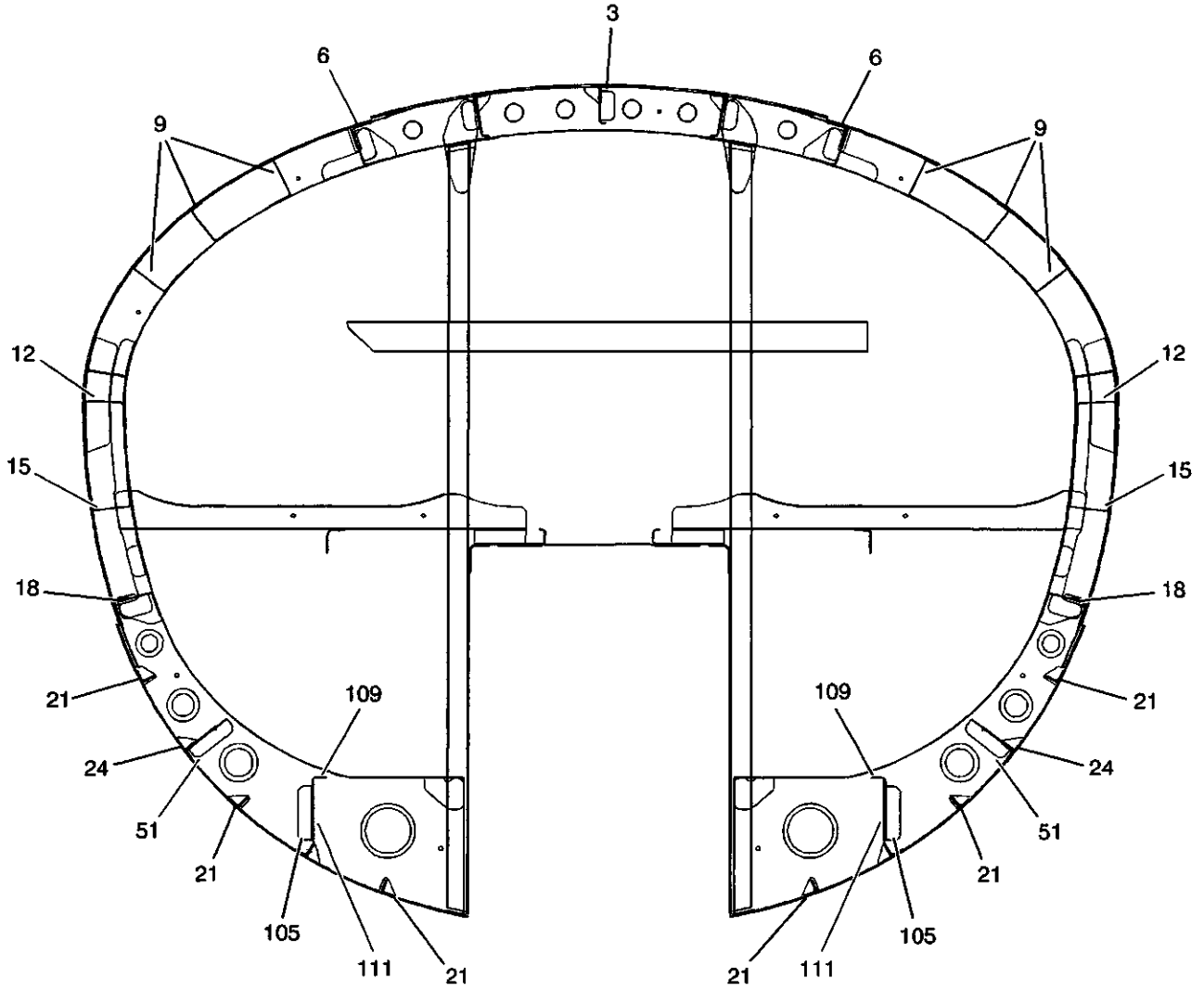

(VIEW LOOKING FORWARD)

Detail B

S45-531001-001-02

Nose Fuselage Structure Repair Index
Figure 1 (Sheet 2 of 3)

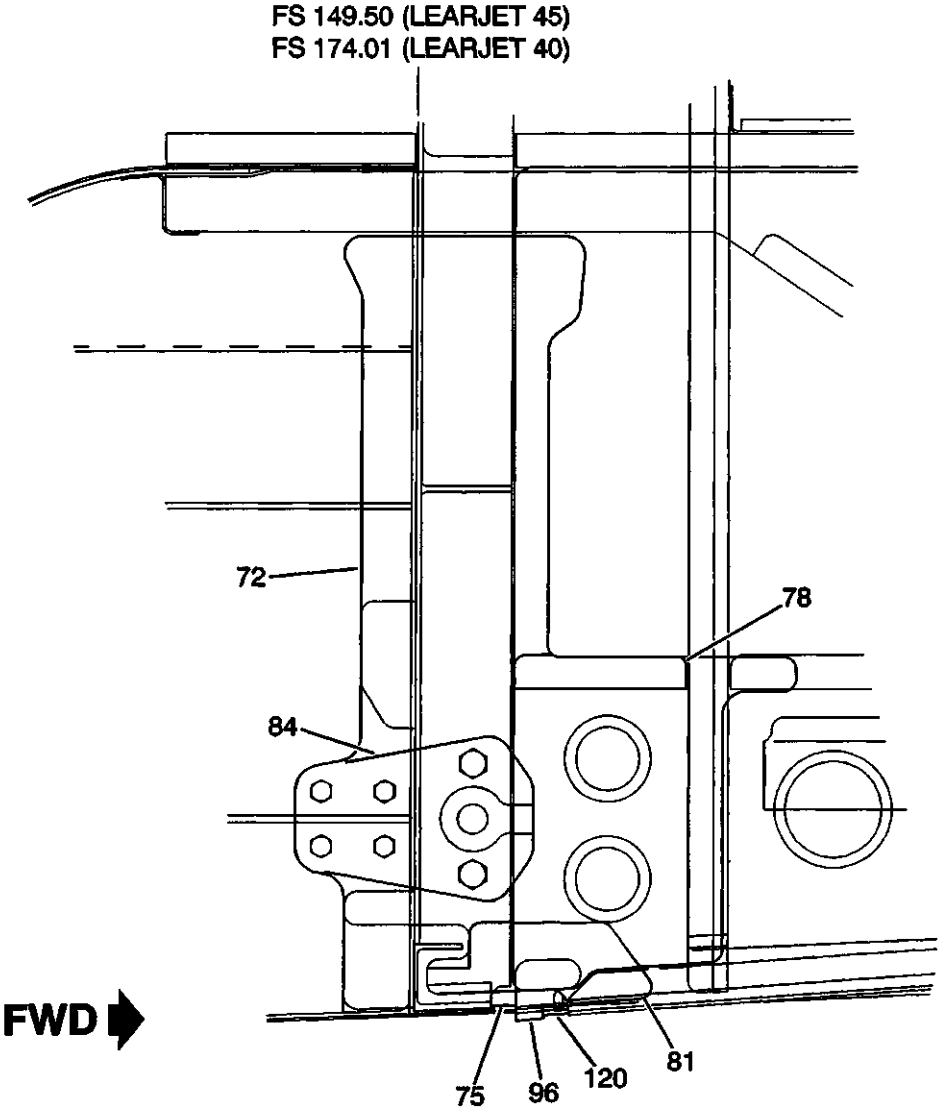

Detail C

S45-531001-001-03

Nose Fuselage Structure Repair Index
Figure 1 (Sheet 3 of 3)

ITEM NO.	DWG. NO.	DESCRIPTION	EFF CODE	MATERIAL	GAGE	FINISH CODE	REPAIR FIG. NO.
		Nose Fuselage Structure					
	4553000001	Nose Fuselage Assy.					
		• Refer to 53-10-05 for Nose Structure Frames					
		• Refer to 53-10-10 for Nose Structure Stringers					
		• Refer to 53-10-15 for Nose Structure Skins					
3	4553108000	• Intercostal	1	2024-T42 Clad	0.040	F3-8	Replace
6	4553108002	• Intercostal, LH & RH	1	2024-T42 Clad	0.040	F3-8	Replace
9	4553108003	• Intercostal, LH & RH (3 ea.)	1	2024-T42 Clad	0.032	F3-8	Replace
12	4553108006	• Intercostal, LH & RH	1	2024-T42 Clad	0.032	F3-8	Replace
15	4553108007	• Intercostal, LH & RH	1	2024-T42 Clad	0.032	F3-8	Replace
18	4553108008	• Intercostal, LH & RH	1	2024-T42 Clad	0.040	F3-8	Replace
21	4553108009	• Angle, LH & RH (3 ea.)	1	2024-T42 Clad	0.040	F3-8	Replace
24	4553108010	• Intercostal, LH & RH	1	2024-T42 Clad	0.032	F3-8	Replace
-	4553108014	• Filler (8 ea.)	1	2024-T3 Clad	0.160	F3-8	Replace
-	4553108017	• Splice, LH & RH	1	2024-T42 Clad	0.125	F3-8	Replace
-	4553108018	• Splice Plate, LH & RH	1	2024-T3 Clad	0.063	F3-8	Replace
-	4553108019	• Splice, LH & RH	1	2024-T42 Clad	0.125	F3-8	Replace
39	4553108023	• Angle, LH & RH	1	2024-T42 Clad	0.040	F3-8	Replace
42	4553108024	• Angle, LH & RH	1	2024-T42 Clad	0.040	F3-8	Replace
45	4553108025	• Angle, LH & RH	1	2024-T42 Clad	0.040	F3-8	Replace
48	4553108026	• Angle, LH & RH	1	2024-T42 Clad	0.040	F3-8	Replace
51	4553108032	• Angle, LH & RH	1	2024-T3 Clad	0.040	F3-8	Replace
-	4553108039	• Filler, LH & RH	1	2024-T351 Plate	0.250	F3-8	Replace
57	4553108041	• Intercostal, LH & RH	1	2024-T42 Clad	0.040	F3-8	Replace
60	4553108042	• Angle, LH & RH	1	2024-T42 Clad	0.040	F3-8	Replace
63	4553206005	• Doubler	1	2024-T3 Clad	0.080	F3-8	Replace
66	4553208071	• Splice Strap	1	2024-T3 Clad	0.050	F3-8	Replace
-	4553208078	• Angle, LH & RH	1	2024-T42 Clad	0.063	F3-8	Replace
72	4525701005	• Splice Strap, LH & RH	1	2024-T3 Clad	0.080	F3-8	Replace
		- Not Illustrated					

Nose Fuselage Structure Repair Index
Table 1 (Sheet 1 of 3)

ITEM NO.	DWG. NO.	DESCRIPTION	EFF CODE	MATERIAL	GAGE	FINISH CODE	REPAIR FIG. NO.
75	4525701010	• Splice (2 ea.)	1	2024-T3 Clad	0.050	F3-8	Replace
78	4525701029	• Angle (2 ea.)	1	2024-T3 Clad	0.050	F3-8	Replace
81	4525701041	• Splice (2 ea.)	1	2024-T3 Clad	0.050	F3-8	Replace
84	4532302039	• Pivot Fitting Assy., Nose Landing Gear (2 ea.)	1	-	-	-	-
-	4532302040	• • Pivot Fitting, Nose Landing Gear	1	7075-T7351	0.850	F3-8	Replace
-	4552800012	• Angle, LH & RH	1	2024-T42 Clad	0.050	F3-8	Replace
96	4552800014	• Retainer, LH & RH	1	7075-T6511 [2]		F3-8	Replace
-	7653102001	• Seal, Radome	1	[3]	0.025	F3-8	Replace
102	4552402001	• Panel, Access	1	2024-T42	0.063	F3-8	Replace
105	4534208004	• Angle, Attachment (2 ea.)	1	2024-T3	0.040	F3-8	Replace
108	4534208005	• Angle, Attachment (2 ea.)	1	2024-T3	0.040	F3-8	Replace
111	4534208006	• Intercostal, LH & RH	1	2024-T42	0.040	F3-8	Replace
-	4553208092	• Filler (4 ea.)	1	2024-T3	0.040	F3-8	Replace
-	4553208093	• Filler (2 ea.)	1	2024-T3	0.050	F3-8	Replace
120	MS20253P2-3977	• Hinge Pin, Nose Landing Gear Door (2 ea.)	1	-	-	-	-
-	4520008459	• Bracket (2 ea.)	2	2024-T3	0.032	F3-8	Replace
-	4553000001 V17	• Bracket	2	2024-T3	0.040	F3-8	Replace
-	4520008460	• Bracket	3	2024-T3	0.040	F3-8	Replace
-	4553208095	• Filler, LH & RH	4	2024-T3	0.020	F3-8	Replace
-	4553208096	• Shim LH & RH	4	[4]	0.030	F3-8	Replace
-	4553000001 V6	• Shim	5	2024-T3	0.040	F3-8	Replace
-	4553000001 V21	• Seal Support LH & RH (4 ea.)	2	2024-T42	0.040	F3-8	Replace
-	4553000001 V22	• Seal Support LH & RH (4 ea.)	3	2024-T42	0.040	F3-8	Replace
-	4520008241	• Bracket (7 ea.)	2	2024-T3	0.032	F3-8	Replace
-	4553000001 V16	• Splice Strap LH & RH	4	2024-T42	0.050	F3-8	Replace
		- Not Illustrated					

Nose Fuselage Structure Repair Index
Table 1 (Sheet 2 of 3)

ITEM NO.	DWG. NO.	DESCRIPTION	EFF CODE	MATERIAL	GAGE	FINISH CODE	REPAIR FIG. NO.
-	4553000001 V13	• Splice Strap LH & RH	5	2024-T42	0.050	F3-8	Replace
156	H0601-1	• Radome	1	▷5	-	-	Replace
-	S-304	• Seal	1	▷6	-	-	Replace
-	S-307	• Corner Seal	1	▷6	-	-	Replace
		- Not Illustrated					

EFFECTIVITY CODE	AIRCRAFT SERIAL NUMBERS
1	45-005 AND SUBSEQUENT
2	45-005 THRU 45-026
3	45-027 AND SUBSEQUENT
4	45-035 AND SUBSEQUENT
5	45-005 THRU 45-034

NOTES

▷1 C17200 ASTM-B-196 HT TF00

▷2 SB07 26 041 Extrusion

▷3 MIL-S-22499, Comp 3, Type1, Class 1

▷5 Heath Techna Aerospace

▷6 Dunlap Precision Rubber

Nose Fuselage Structure Repair Index
Table 1 (Sheet 3 of 3)

NOSE FUSELAGE STRUCTURE - ALLOWABLE DAMAGE

1. Allowable Damage Limits

NOTE: All dimensions are in inches unless otherwise specified.

A. Fasteners
(1) Loose or failed rivets are not allowed. A loose or failed rivet can cause increased stress concentrations on the remaining rivets and lead to progressive joint failure. A careful inspection must be performed to ensure that joint failure has not spread from the area of the loose or failed rivet. (Refer to 51-40-05 for definition of rivet failure.)
(2) Loose or failed screws are not allowed. A loose or failed screw can cause increased stress concentrations on surrounding screws and lead to progressive joint failure. A careful inspection must be performed to ensure that the joint failure has not spread from the area of the loose or failed screw.

B. Cracks
(1) Cracks in any fitting or forging are not allowed. Cracked fittings or forgings must be replaced.
(2) Cracks in components other than fittings and forgings are considered allowable if properly repaired and refinished in accordance with 51-70-00.

C. Deformation
(1) Deformation of the nose fuselage structure is not allowed.

D. Corrosion (See Figure 101.)
(1) Corrosion damage is permissible if the affected area is properly repaired, refinished in accordance with 51-30-15 and these repairs do not reduce the original material thickness more than specified. (Refer to 51-70-00.)
(2) Structural components must be repaired or replaced if corrosion repair reduces the original material thickness more than specified.

E. Dents
(1) Dents are permissible if smooth and without abrupt changes in contour, do not exceed 0.100 inch (2.54 mm) in depth, do not exceed 10% of total surface area in one (1) square foot, and are not closer than 0.50 inch (12.7 mm) to any rivet or structural area.
(2) Dents are not allowed if sharp, a fracture of the skin has occurred greater than 0.100 inch (2.54 mm) in depth, exceeds 10% of the total surface area in one (1) square foot, and are closer than 0.50 inch (12.7 mm) to a rivet or structural area. Such dents shall be repaired or the component replaced.

F. Scratches (See Figure 101.)
(1) Scratches are permissible if the affected area is sanded smooth, refinished in accordance with 51-70-00, and the repairs do not reduce the original material thickness more than specified. (Refer to 51-30-15 for protective treatment procedures.)
(2) Structural components must be replaced or repaired if scratches reduce the original material thickness by more than specified.

G. Nicks (See Figure 101.)
   (1) Nicks are permissible if the affected area is sanded smooth, refinished in accordance with 51-70-00, and the repairs do not reduce the original material thickness more than specified. (Refer to 51-30-15 for protective treatment procedures.)
   (2) Structural components must be replaced or repaired if nicks reduce the original material thickness more than specified.

H. Fittings and Forgings
   (1) Fittings or forgings must be replaced if cracked or if fitting hole (non-bushed) tolerance exceeds the allowable limits. (Refer to 51-70-00.)
   (2) Fittings or forgings with bushing shall be repaired.

Nominal Thickness (Inch)	Minimum Thickness (Inch)
0.016	0.0135
0.020	0.0175
0.025	0.0225
0.032	0.0295
0.040	0.0370
0.050	0.0460
0.063	0.0590
0.071	0.0670
0.080	0.0760
0.100	0.0950
0.125	0.1200
0.190	0.1800
0.250	0.2370

Allowable Material Thickness
Figure 101

1. Repairs

A. Refer to 51-70-00 for typical repairs and allowable wear and repair data.

NOSE EXTENSION STRUCTURE

1. **Nose Extension Structure Repair Index (See Figure 1 and Table 1.)**

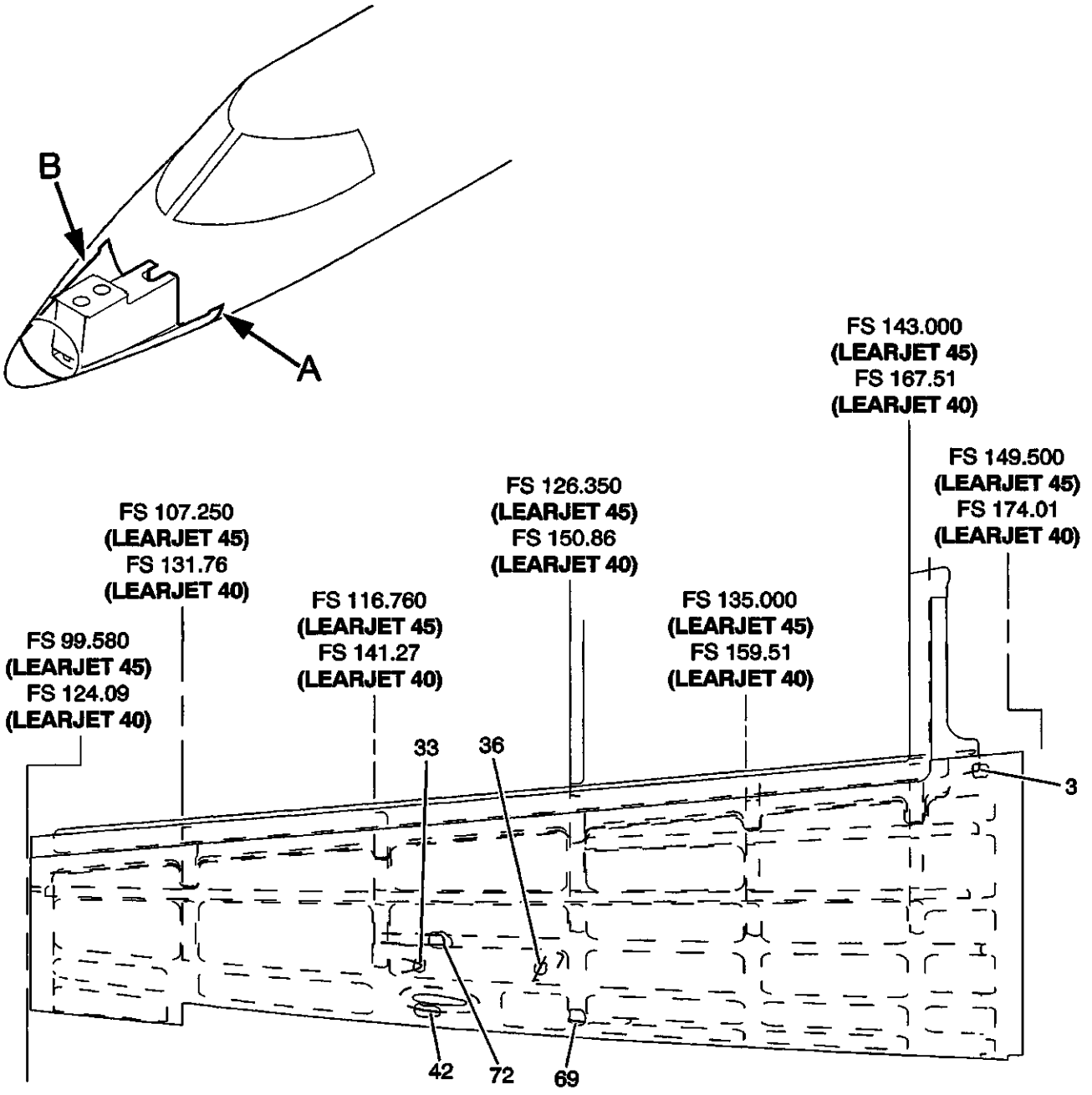

(VIEW LOOKING INBOARD LH SIDE)

Detail A

S45-531002-001-01

Nose Extension Structure Repair Index
Figure 1 (Sheet 1 of 5)

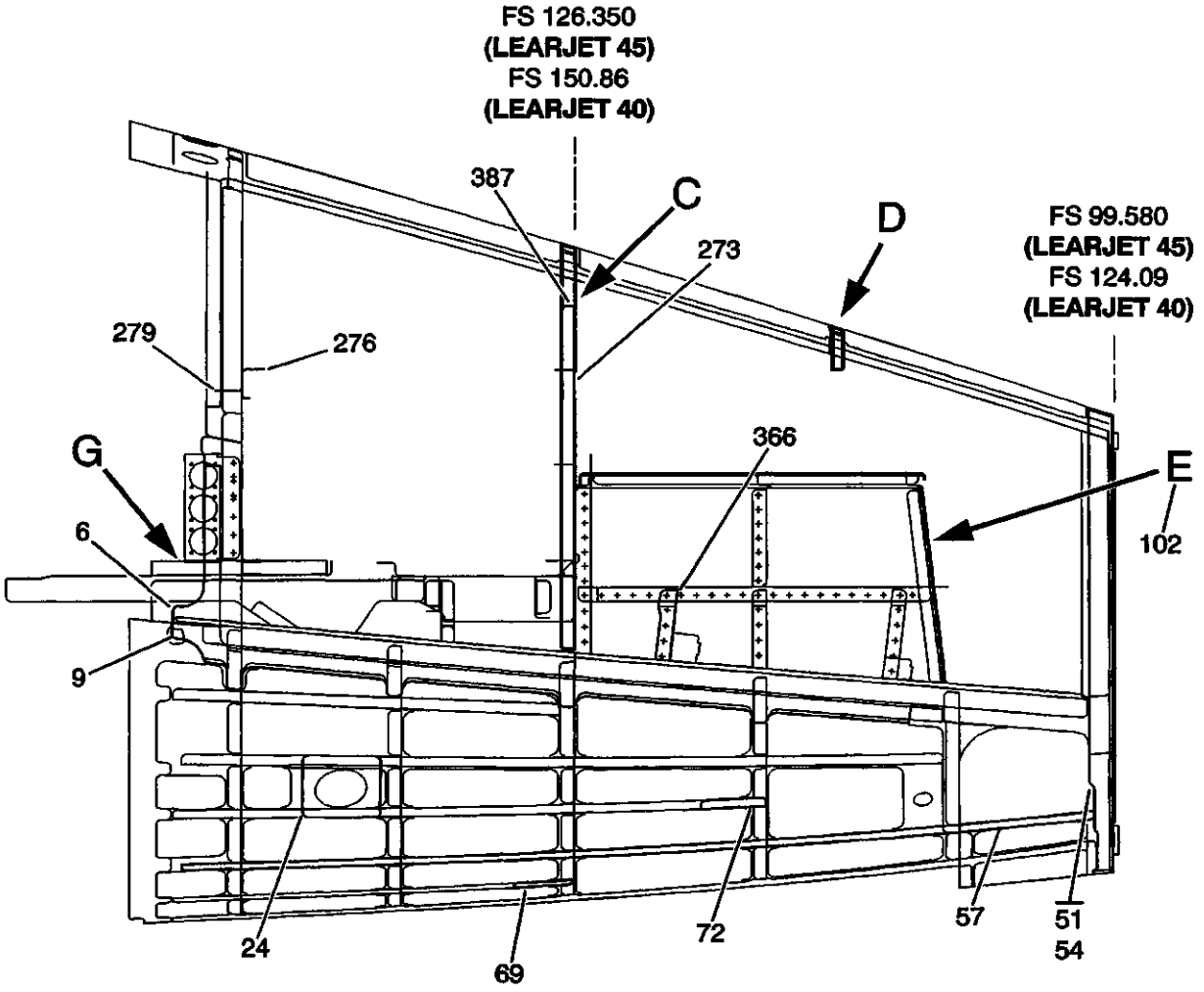

(VIEW LOOKING INBOARD RH SIDE)

FWD

Detail B

S45-531002-001-02

Nose Extension Structure Repair Index
Figure 1 (Sheet 2 of 5)

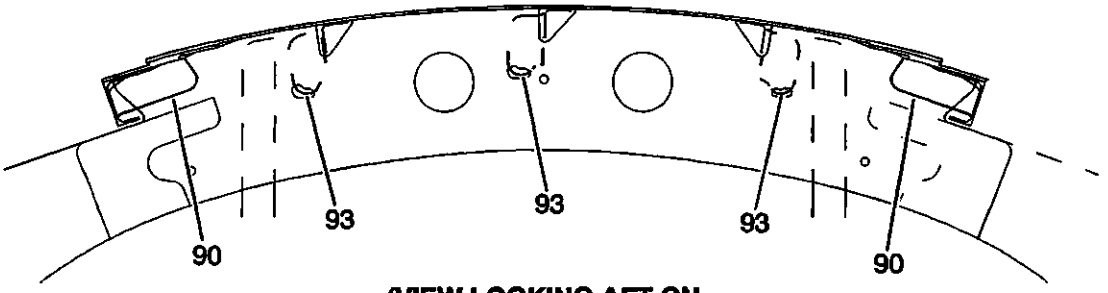

**(VIEW LOOKING AFT ON
FS 126.35 (LEARJET 45)
FS 159.51 (LEARJET 40))**

Detail C

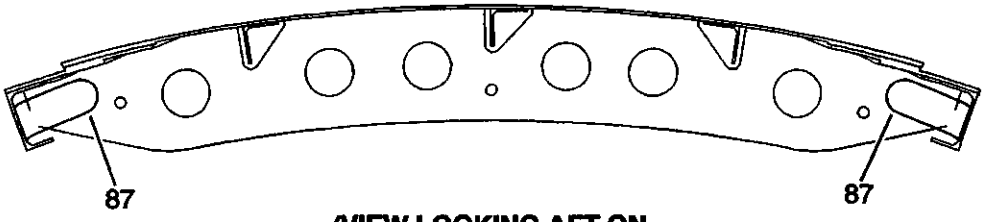

**(VIEW LOOKING AFT ON
FS 112.96 (LEARJET 45)
FS 137.47 (LEARJET 40))**

Detail D

S45-531002-001-03

Nose Extension Structure Repair Index
Figure 1 (Sheet 3 of 5)

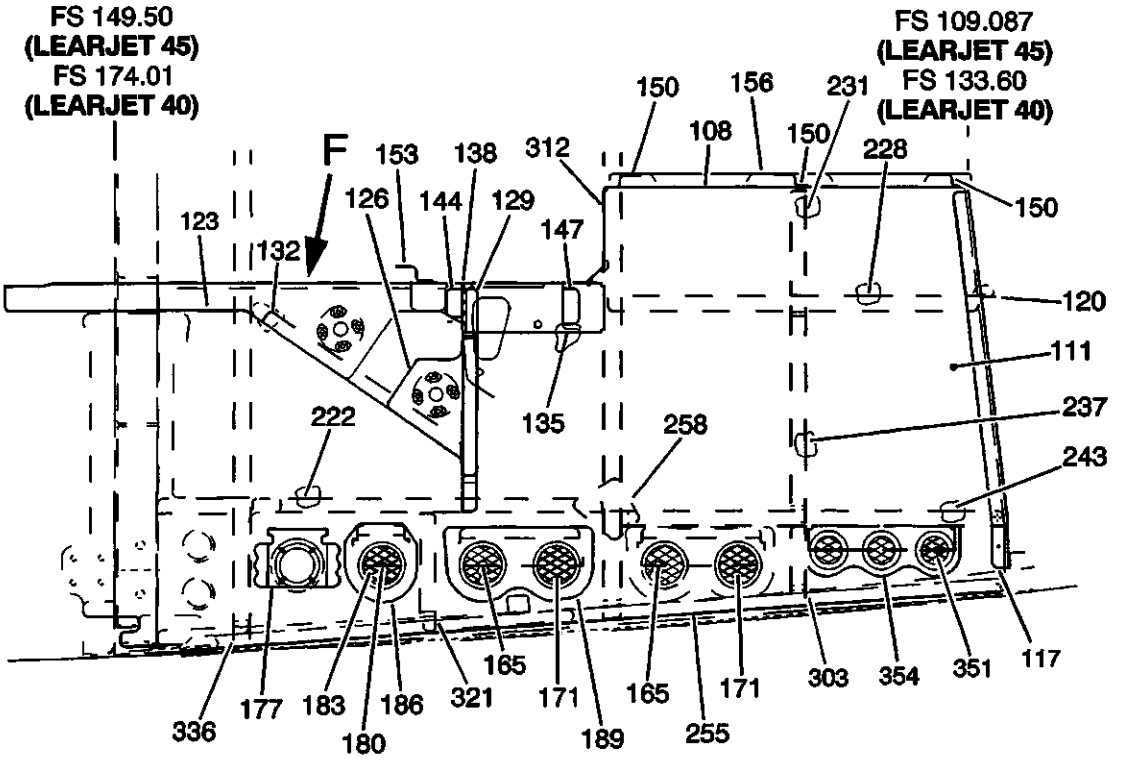

(CENTER LOOKING LEFT)

FWD

Detail E

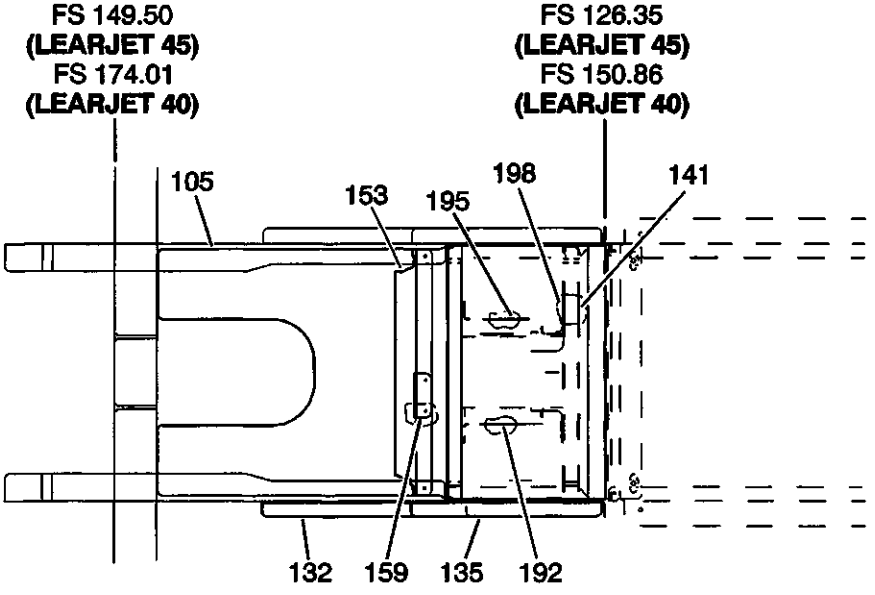

(TOP LOOKING DOWN)

FWD

Detail F

S45-531002-001-04

Nose Extension Structure Repair Index
Figure 1 (Sheet 4 of 5)

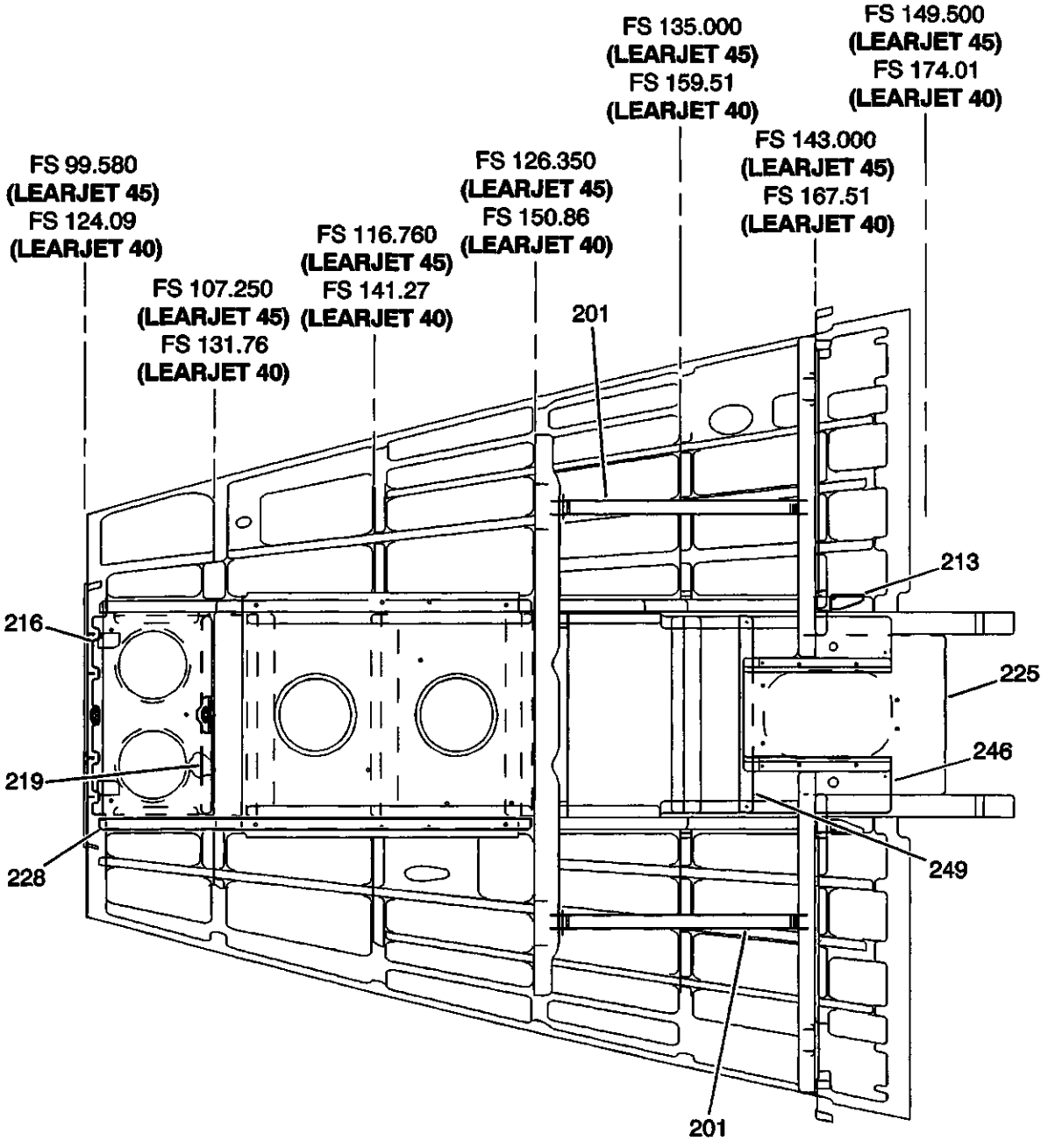

(VIEW LOOKING DOWN)

Detail G

S45-531002-001-05

Nose Extension Structure Repair Index
Figure 1 (Sheet 5 of 5)

ITEM NO.	DWG. NO.	DESCRIPTION	EFF CODE	MATERIAL	GAGE	FINISH CODE	REPAIR FIG. NO.
	4553000001	Nose Fuselage Assy.	1				
	4553001000	• Nose Extension Assy.	1				
		• Refer to 53-10-05 for Forward Fuselage Frames					
		• Refer to 53-10-10 for Forward Fuselage Stringers					
		• Refer to 53-10-15 for Forward Fuselage Skins					
	4553001001	• • Lower Panel Assy., Forward Fuselage	1				
-	4553106004	• • • Coaming, LH	1	2024-T42 Clad	0.125	F3-8	Replace
3	4553106005	• • • Doubler, LH	1	2024-T3 Clad	0.032	F3-8	Replace
6	4553106006	• • • Coaming, RH	1	2024-T42 Clad	0.125	F3-8	Replace
9	4553106007	• • • Doubler, RH	1	2024-T3 Clad	0.032	F3-8	Replace
-	4553100203	• • • Angle, LH & RH	1	2024-T3 Clad	0.040	F3-8	Replace
-	4553100303	• • • Angle, LH & RH	1	2024-T3 Clad	0.032	F3-8	Replace
-	4553100502	• • • Angle, LH & RH	1	2024-T3 Clad	0.040	F3-8	Replace
24	4534108010	• • • Doubler	1	2024-T42 Clad	0.050	F3-8	Replace
-	4530808006	• • • Bracket, Ice Detection	1	2024-T42 Clad	0.050	F3-8	Replace
-	4530808007	• • • Shim, Ice Detection	1	▷		F3-8	Replace
33	4530808008	• • • Bracket, Ice Detection	1	2024-T3 Clad	0.050	F3-8	Replace
36	4530808009	• • • Bracket, Ice Detection	1	2024-T42 Clad	0.050	F3-8	Replace
-	4530808010	• • • Doubler, Ice Detection	1	2024-T42 Clad	0.040	F3-8	Replace
42	4530808011	• • • Doubler, Ice Detection	1	2024-T3 Clad	0.050	F3-8	Replace
-	4530808013	• • • Bracket, Ice Detection	1	2024-T42 Clad	0.050	F3-8	Replace
48	4553108028	• • • Striker Plate	1	2024-T3 Clad	0.190	F3-8	Replace
51	4553108029	• • • Doubler, RH	1	2024-T3 Clad	0.063	F3-8	Replace
54	4553108030	• • • Doubler, RH	1	2024-T3 Clad	0.032	F3-8	Replace
57	4553108031	• • • Angle, Door	1	2024-T42 Clad	0.040	F3-8	Replace
-	4553108034	• • • Filler, Lower	1	2024-T3 Clad	0.050	F3-8	Replace
-	4553108035	• • • Filler, Upper	1	2024-T3 Clad	0.050	F3-8	Replace
		- Not Illustrated					

Nose Extension Structure Repair Index
Table 1 (Sheet 1 of 7)

ITEM NO.	DWG. NO.	DESCRIPTION	EFF CODE	MATERIAL	GAGE	FINISH CODE	REPAIR FIG. NO.
-	4553108037	• • • Seal, Door	1	[2]		F3-8	Replace
69	4553108038	• • • Angle, LH & RH (3 ea.)	1	2024-T42 Clad	0.040	F3-8	Replace
72	4553108040	• • • Angle	1	2024-T42 Clad	0.040	F3-8	Replace
-	4535102007	• • • Support Bracket, Oxygen (4 ea.)	1	2024-T3 Clad	0.040	F3-8	Replace
-	4552401002	• • • Hinge, Oxygen Access Door	1	[3]		F3-8	Replace
-	4520008168	• • • Bracket, T.M. Module (6 ea.)	1	2024-T42 Clad	0.032	F3-8	Replace
-	4553001002	• • Upper Panel Assy., Nose Extension	1	-	-	-	-
87	4553100252	• • • Stringer Angle, LH & RH	1	2024-T42 Clad	0.040	F3-8	Replace
90	4553100452	• • • Attach Angle, LH & RH	1	2024-T42 Clad	0.040	F3-8	Replace
93	4553100453	• • • Splice Angle, LH & RH (2 ea.)	1	2024-T3 Clad	0.040	F3-8	Replace
96	4553106003	• • • Upper Coaming, LH & RH	1	2024-T42 Clad	0.125	F3-8	Replace
-	4553001002V5	• • • Mounting Bracket (2 ea.)	1	2024-T3 Clad	0.032	F3-8	Replace
102	4525701000	• • Wheelbox Structure, NLG	1	-	-	-	-
105	4525701003	• • • Panel, Top	1	2024-T3 Clad	0.032	F3-8	Replace
108	4525701013	• • • Panel, Top	1	2024-T3 Clad	0.032	F3-8	Replace
111	4525701004	• • • Panel, LH	1	2024-T3 Clad	0.032	F3-8	Replace
-	4525701012	• • • Panel, RH	1	2024-T3 Clad	0.032	F3-8	Replace
117	4525701007	• • • Attachment Angle (2 ea.)	1	2024-T42 Clad	0.032	F3-8	Replace
120	4525701022	• • • Angle, Stiffener	1	2024-T3 Clad	0.032	F3-8	Replace
123	4525701025	• • • Attachment Angle (2 ea.)	1	2024-T3 Clad	0.032	F3-8	Replace
126	4525701024	• • • Doubler	1	2024-T42 Clad	0.063	F3-8	Replace
129	4525701015	• • • Angle, Stiffener (2 ea.)	1	2024-T42 Clad	0.050	F3-8	Replace
132	4525701017	• • • Angle, Stiffener (2 ea.)	1	2024-T42 Clad	0.050	F3-8	Replace
135	4525701019	• • • Channel, Stiffener (2 ea.)	1	2024-T3 Clad	0.040	F3-8	Replace
138	4525701023	• • • Channel, Support	1	2024-T42 Clad	0.050	F3-8	Replace
141	4525701020	• • • Channel, Support	1	2024-T42 Clad	0.071	F3-8	Replace
144	4525701034	• • • Attachment Angle	1	2024-T3 Clad	0.050	F3-8	Replace
		- Not Illustrated					

Nose Extension Structure Repair Index
Table 1 (Sheet 2 of 7)

ITEM NO.	DWG. NO.	DESCRIPTION	EFF CODE	MATERIAL	GAGE	FINISH CODE	REPAIR FIG. NO.
147	4525701021	• • • Attachment Angle (2 ea.)	1	2024-T3 Clad	0.032	F3-8	Replace
150	4525701033	• • • Zee, Support (3 ea.)	1	2024-T42 Clad	0.050	F3-8	Replace
153	4525701043	• • • Zee, Support	1	2024-T42 Clad	0.063	F3-8	Replace
156	4525708021	• • • Tray, Equipment	1	2024-T42 Clad	0.040	F3-8	Replace
159	4532302031 5	• • • Freefall Cable Mounting Bracket	1	2024-T3 Clad	0.027	F3-8	Replace
-	4525701032	• • • Vent Cover	1	2024-T3 Clad	0.025	F3-8	Replace
165	4525701035	• • • Vent Cover (4 ea.)	1	2024-T3 Clad	0.025	F3-8	Replace
-	4525701044	• • • HIRF Screen	1	4			
171	4525701045	• • • HIRF Screen (4 ea.)	1	4			
-	4525701047	• • • Retainer	1	2024-T3 Clad	0.032	F3-8	Replace
177	4520008167	• • • Plug Break, LH	1	2024-T3 Clad	0.040	F3-8	Replace
180	4525701063	• • • Vent Cover, LH	1	2024-T3 Clad	0.025	F3-8	Replace
183	4525701064	• • • Screen, LH HIRF	1	4			
186	4525701065	• • • Retainer, LH HIRF	1	2024-T3 Clad	0.032	F3-8	Replace
-	4525701048	• • • Retainer (4 ea.)	1	2024-T3 Clad	0.032	F3-8	Replace
192	4532302016	• • • Mounting Bracket	1	7075-T7351	0.080	F3-8	Replace
195	4532302017	• • • Mounting Bracket	1	7075-T7351	0.080	F3-8	Replace
198	4532302018	• • • Attach Angle (2 ea.)	1	2024-T42 Clad	0.080	F3-8	Replace
201	4520008041	• • Support Angle, Relay Box (2 ea.)	1	2024-T42 Clad	0.050	F3-8	Replace
213	4520008163	• • Bracket, Break Plug	1	2024-T42 Clad	0.040	F3-8	Replace
216	4524308001	• • Shelf, Battery	1	2024-T42 Clad	0.050	F3-8	Replace
219	4524308003	• • Support Angle	1	2024-T3 Clad	0.063	F3-8	Replace
222	4525701006	• • Stiffener Angle, LH & RH	1	2024-T3Clad	0.050	F3-8	Replace
225	4525701008	• • Doubler	1	2024-T3 Clad	0.050	F3-8	Replace
228	4525701009	• • Stiffener Angle, LH & RH	1	2024-T42 Clad	0.032	F3-8	Replace
231	4525701011	• • Stiffener Angle, LH & RH	1	2024-T3 Clad	0.032	F3-8	Replace
-	4525701014	• • U-channel (2 ea.)	1	2024-T3 Clad	0.040	F3-8	Replace
237	4525701016 6	• • Stiffener Angle, LH	1	2024-T42 Clad	0.032	F3-8	Replace
-	4553001000V27	• • Stiffener Angle, RH	2	2024-T42 Clad	0.032	F3-8	Replace
243	4525701026	• • Stiffener Angle, LH & RH	1	2024-T42 Clad	0.032	F3-8	Replace
		- Not Illustrated					

Nose Extension Structure Repair Index
Table 1 (Sheet 3 of 7)

ITEM NO.	DWG. NO.	DESCRIPTION	EFF CODE	MATERIAL	GAGE	FINISH CODE	REPAIR FIG. NO.
-	4527202124	• • • Doubler (2 ea.)	1	2024-T3 Clad	0.050	F3-8	Replace
-	4527202125	• • • Angle, LH & RH	1	2024-T3 Clad	0.040	F3-8	Replace
255	4527202105	• • • Mounting Plate	1	7075-T7351	2.000	F3-8	Replace
258	4527202106	• • • Channel	1	7075-T7351	0.500	F3-8	Replace
-	4527202119	• • • Angle, LH & RH	1	2024-T3 Clad	0.040	F3-8	Replace
264	4527302084	• • • Angle, LH & RH	1	2024-T42 Clad	0.050	F3-8	Replace
267	4527302085	• • • Angle, LH & RH	1	2024-T42 Clad	0.050	F3-8	Replace
-	4527302093	• • • Angle, Elevator Pulley (2 ea.)	1	2024-T42 Clad	0.050	F3-8	Replace
-	4527302094	• • • Angle, LH & RH	1	2024-T42 Clad	0.050	F3-8	Replace
276	4521202012	• • • Support Bracket (2 ea.)	1	2024-T42 Clad	0.040	F3-8	Replace
-	4521202016	• • • Support Bracket	1	2024-T42 Clad	0.050	F3-8	Replace
-	4527202162 ▷	• • • Plate, Guard Pin (4 ea.)	1	2024-T3 Clad	0.050	F3-8	Replace
-	4527302065	• • • Guard Bracket (2 ea.)	1	2024-T3 Clad	0.040	F3-8	Replace
288	4532402029	• • • Fitting, Parking Brake (2 ea.)	1	7075-T7351	▷	F3-8	Replace
291	4520008027	• • • Cable Tray LH & RH	1	2024-T42 Clad	0.020	F3-8	Replace
-	4520008184	• • • Support Angle, LH	1	2024-T3 Clad	0.032	F3-8	Replace
-	4520008028	• • • Support Angle, RH	1	2024-T42 Clad	0.040	F3-8	Replace
-	4520008185	• • • Support Angle, LH	1	2024-T42Clad	0.032	F3-8	Replace
-	4520008029	• • • Support Angle, RH	1	2024-T42 Clad	0.040	F3-8	Replace
-	4520008187	• • • Support Angle, LH	1	2024-T3 Clad	0.032	F3-8	Replace
-	4520008030	• • • Support Angle, RH	1	2024-T42 Clad	0.040	F3-8	Replace
-	4527202163	• • • Channel (2 ea.)	1	7075-T7351	1.000	F3-8	Replace
-	4520008043	• • • Packer (4 ea.)	1	2024-T42 Clad	0.050	F3-8	Replace
-	4520008044	• • • Packer (2 ea.)	1	2024-T3 Clad	0.050	F3-8	Replace
-	4527302064	• • • Guard Bracket (2 ea.)	1	2024-T42 Clad	0.040	F3-8	Replace
324	4527302077	• • • Support Angle (2 ea.)	1	2024-T3 Clad	0.040	F3-8	Replace
327	4532302027	• • • Channel	1	2024-T42 Clad	0.050	F3-8	Replace
330	4553208080	• • • Channel	1	2024-T42 Clad	0.050	F3-8	Replace
333	4527302100	• • • Bracket, LH & RH	1	7075-T7351	3.000	F3-8	Replace
		- Not Illustrated					

Nose Extension Structure Repair Index
Table 1 (Sheet 4 of 7)

ITEM NO.	DWG. NO.	DESCRIPTION	EFF CODE	MATERIAL	GAGE	FINISH CODE	REPAIR FIG. NO.
-	4553100607	• • Gusset, LH & RH Lwr	1	2024-T3 Clad	0.032	F3-8	Replace
-	4553100653	• • Gusset, LH & RH Upper	1	2024-T42 Clad	0.040	F3-8	Replace
-	4553100654	• • Attach Angle (2 ea.)	1	2024-T3 Clad	0.040	F3-8	Replace
-	4533108020 [8]	• • Attach Angle, LH & RH (3 ea.)	1	2024-T42 Clad	0.040	F3-8	Replace
351	4525701046	• • HIRF Screen (2 ea.)	1	[4]			
354	4525701049	• • Retainer, HIRF Screen (2 ea.)	1	2024-T3 Clad	0.040	F3-8	Replace
-	4534208021 [8]	• • Support Bracket (2 ea.)	1	2024-T3 Clad	0.040	F3-8	Replace
-	4534208022	• • Support Bracket (2 ea.)	1	2024-T3 Clad	0.040	F3-8	Replace
-	4534208023 [8]	• • Support Bracket (2 ea.)	1	2024-T3 Clad	0.040	F3-8	Replace
366	4535102043	• • Angle Bracket	1	2024-T42 Clad	0.050	F3-8	Replace
-	4527408002	• • Support Angle, Fwd	1	2024-T3 Clad	0.040	F3-8	Replace
-	4527408003	• • Support Angle, Fwd	1	2024-T3 Clad	0.040	F3-8	Replace
-	4520008137	• • Bracket	1	2024-T3 Clad	0.040	F3-8	Replace
-	4532508002	• • Bracket	1	2024-T3 Clad	0.040	F3-8	Replace
-	4532508003	• • Bracket	1	2024-T3 Clad	0.040	F3-8	Replace
-	4532508004	• • Bracket	1	2024-T3 Clad	0.040	F3-8	Replace
387	4525708024	• • Support Angle	6	2024-T3 Clad	0.040	F3-8	Replace
-	4553001000V25	• • Doubler	9	7075-T73 Clad	0.050	F4-8	Replace
-	4553001000V5	• • Splash Guard	10	2024-T3 Clad	0.032	F4-8	Replace
-	4553001000V2	• • Channels (2 ea.)	11	2024-T3 Clad	0.040	F4-8	Replace
-	4553001000V22	• • Bracket, LH & RH (6 ea.)	5	2024-T3 Clad	0.050	F4-8	Replace
-	4553001000V22	• • Plate	5	2024-T3 Clad	0.040	F4-8	Replace
-	4553001000V22	• • Angle, LH & RH (3 ea.)	5	2024-T3 Clad	0.050	F4-8	Replace
-	4553001000V34	• • Angle	5	2024-T3 Clad	0.050	F4-8	Replace
-	4553001000V23	• • Angle, LH & RH (2 ea.)	5	2024-T3 Clad	0.050	F4-8	Replace
-	4553001000V31	• • Bracket, Placard Plate	12	2024-T3 Clad	0.032	F4-8	Replace
-	4553001000V11	• • Bracket	7	2024-T3 Clad	0.040	F4-8	Replace
-	4553001000V30	• • Bracket (2 ea.)	8	2024-T3 Clad	0.032	F4-8	Replace
-	4553001000V30	• • Channel	8	2024-T3 Clad	0.032	F4-8	Replace
-	4553001000V30	• • Angle (3 ea.)	8	2024-T3 Clad	0.032	F4-8	Replace
-	4553001000V30	• • Bracket (2 ea.)	8	2024-T42 Clad	0.050	F4-8	Replace
-	4553001000V30	• • Bracket (2 ea.)	8	2024-T3 Clad	0.040	F4-8	Replace
		- Not Illustrated					

Nose Extension Structure Repair Index
Table 1 (Sheet 5 of 7)

ITEM NO.	DWG. NO.	DESCRIPTION	EFF CODE	MATERIAL	GAGE	FINISH CODE	REPAIR FIG. NO.
-	4553001000V36	• • Bracket	9	2024-T3 Clad	0.032	F4-8	Replace
-	4553001000V36	• • Channel	9	2024-T3 Clad	0.032	F4-8	Replace
-	4553001000V36	• • Angle (2 ea.)	9	2024-T3 Clad	0.032	F4-8	Replace
-	4553001000V36	• • Bracket (2 ea.)	9	2024-T42 Clad	0.050	F4-8	Replace
-	4553001000V36	• • Bracket (2 ea.)	9	2024-T3 Clad	0.040	F4-8	Replace
450	4533108018	• • Bracket, LH & RH	13	2024-T3 Clad	0.050	F3-8	Replace
453	4533108019	• • Bracket, LH & RH	13	2024-T42 Clad	0.050	F3-8	Replace
456	4533108026	• • Support Angle, LH & RH	13	2024-T3 Clad	0.040	F3-8	Replace
-	4553001000V38	• • Patch, Outlet Assy.	12	-	-	-	-
-	4553001000V38	• • • Doubler	12	2024-T3 Clad	0.050	F3-8	Replace
-	4553001000V38	• • • Plug	12	2024-T3 Clad	0.080	F3-8	Replace
-	4553001000V33	• • Patch, Outlet Assy.	12				
-	4553001000V33	• • • Doubler	12	2024-T3 Clad	0.050	F0	Replace
-	4553001000V38	• • Patch, Outlet Assy.	12	-	-	-	-
-	4553001000V38	• • • Doubler	12	2024-T3 Clad	0.063	F0	Replace
-	4553001000V38	• • • Plug	12	2024-T3 Clad	0.063	F0	Replace
-	4553001000V32	• • Support Plate, Lighting Control	12	2024-T42 Clad	0.050	F4-8	Replace
-	4553001000V40	• • • Support Plate, Lighting Control	1	2024-T42 Clad	0.050	F4-8	Replace
		- Not Illustrated					

Nose Extension Structure Repair Index
Table 1 (Sheet 6 of 7)

EFFECTIVITY CODE	AIRCRAFT SERIAL NUMBERS
1	45-005 AND SUBSEQUENT
2	45-005 THRU 45-024
3	45-046 AND SUBSEQUENT
4	45-005 THRU 45-026
5	45-005 THRU 45-014
6	45-015 THRU 45-026
7	45-005 THRU 45-034
8	45-005 THRU 45-023
9	45-024 THRU TBD
10	45-005 THRU 45-006
11	45-005 THRU 45-033
12	45-005 THRU TBD
13	45-027 AND SUBSEQUENT

NOTES

1. MIL-S-22499 Comp. 3, Type 2, Class 1
2. AMS3332A Silicone Rubber, 20-30 HD, Grey, 0.040
3. Make from MS20257P4-700 Aluminum Hinge
4. N-S Woven Wire Cloth, 40x40 Mesh, 0.006/0.007, 20% Nickel, ply cold bond. Material Code 8014040
5. Refer to drawing 4525701000V5A
6. On Aircraft 45-005 thru 45-024, refer to drawing 4553001000V27
7. Make from MS20001 HP-4-3900
8. Refer to drawing 4553001000V.1,16 & 20
9. On Aircraft 45-005 thru 45-045 refer to drawing 4553001000V37

Nose Extension Structure Repair Index
Table 1 (Sheet 7 of 7)

NOSE EXTENSION STRUCTURE - ALLOWABLE DAMAGE

1. Allowable Damage Limits

NOTE: All dimensions are in inches unless otherwise specified.

A. Fasteners
(1) Loose or failed rivets are not allowed. A loose or failed rivet can cause increased stress concentrations on the remaining rivets and lead to progressive joint failure. A careful inspection must be performed to ensure that joint failure has not spread from the area of the loose or failed rivet. (Refer to 51-40-05 for definition of rivet failure.)
(2) Loose or failed screws are not allowed. A loose or failed screw can cause increased stress concentrations on surrounding screws and lead to progressive joint failure. A careful inspection must be performed to ensure that the joint failure has not spread from the area of the loose or failed screw.

B. Cracks
(1) Cracks in any fitting or forging are not allowed. Cracked fittings or forgings must be replaced.
(2) Cracks in components other than fittings and forgings are considered allowable if properly repaired and refinished in accordance with 51-70-00.

C. Deformation
(1) Deformation of the nose extension structure is not allowed.

D. Corrosion (See Figure 101.)
(1) Corrosion damage is permissible if the affected area is properly repaired, refinished in accordance with 51-30-15 and these repairs do not reduce the original material thickness more than specified. (Refer to 51-70-00.)
(2) Structural components must be repaired or replaced if corrosion repair reduces the original material thickness more than specified.

E. Dents
(1) Dents are permissible if smooth and without abrupt changes in contour, do not exceed 0.100 inch (2.54 mm) in depth, do not exceed 10% of total surface area in one (1) square foot, and are not closer than 0.50 inch (12.7 mm) to any rivet or structural area.
(2) Dents are not allowed if sharp, a fracture of the skin has occurred greater than 0.100 inch (2.54 mm) in depth, exceeds 10% of the total surface area in one (1) square foot, and are closer than 0.50 inch (12.7 mm) to a rivet or structural area. Such dents shall be repaired or the component replaced.

F. Scratches (See Figure 101.)
(1) Scratches are permissible if the affected area is sanded smooth, refinished in accordance with 51-70-00, and the repairs do not reduce the original material thickness more than specified. (Refer to 51-30-15 for protective treatment procedures.)
(2) Structural components must be replaced or repaired if scratches reduce the original material thickness by more than specified.

G. Nicks (See Figure 101.)
   (1) Nicks are permissible if the affected area is sanded smooth, refinished in accordance with 51-70-00, and the repairs do not reduce the original material thickness more than specified. (Refer to 51-30-15 for protective treatment procedures.)
   (2) Structural components must be replaced or repaired if nicks reduce the original material thickness more than specified.

H. Fittings and Forgings
   (1) Fittings or forgings must be replaced if cracked or if fitting hole (non-bushed) tolerance exceeds the allowable limits. (Refer to 51-70-00.)
   (2) Fittings or forgings with bushing shall be repaired.

Nominal Thickness (Inch)	Minimum Thickness (Inch)
0.016	0.0135
0.020	0.0175
0.025	0.0225
0.032	0.0295
0.040	0.0370
0.050	0.0460
0.063	0.0590
0.071	0.0670
0.080	0.0760
0.100	0.0950
0.125	0.1200
0.190	0.1800
0.250	0.2370

Allowable Material Thickness
Figure 101

NOSE EXTENSION STRUCTURE - REPAIR

1. Repairs

A. Refer to 51-70-00 for typical repairs and allowable wear and repair data.

FLIGHT DECK STRUCTURE

1. **Flight Deck Structure Repair Index (Figure 1 and Table 1.)**

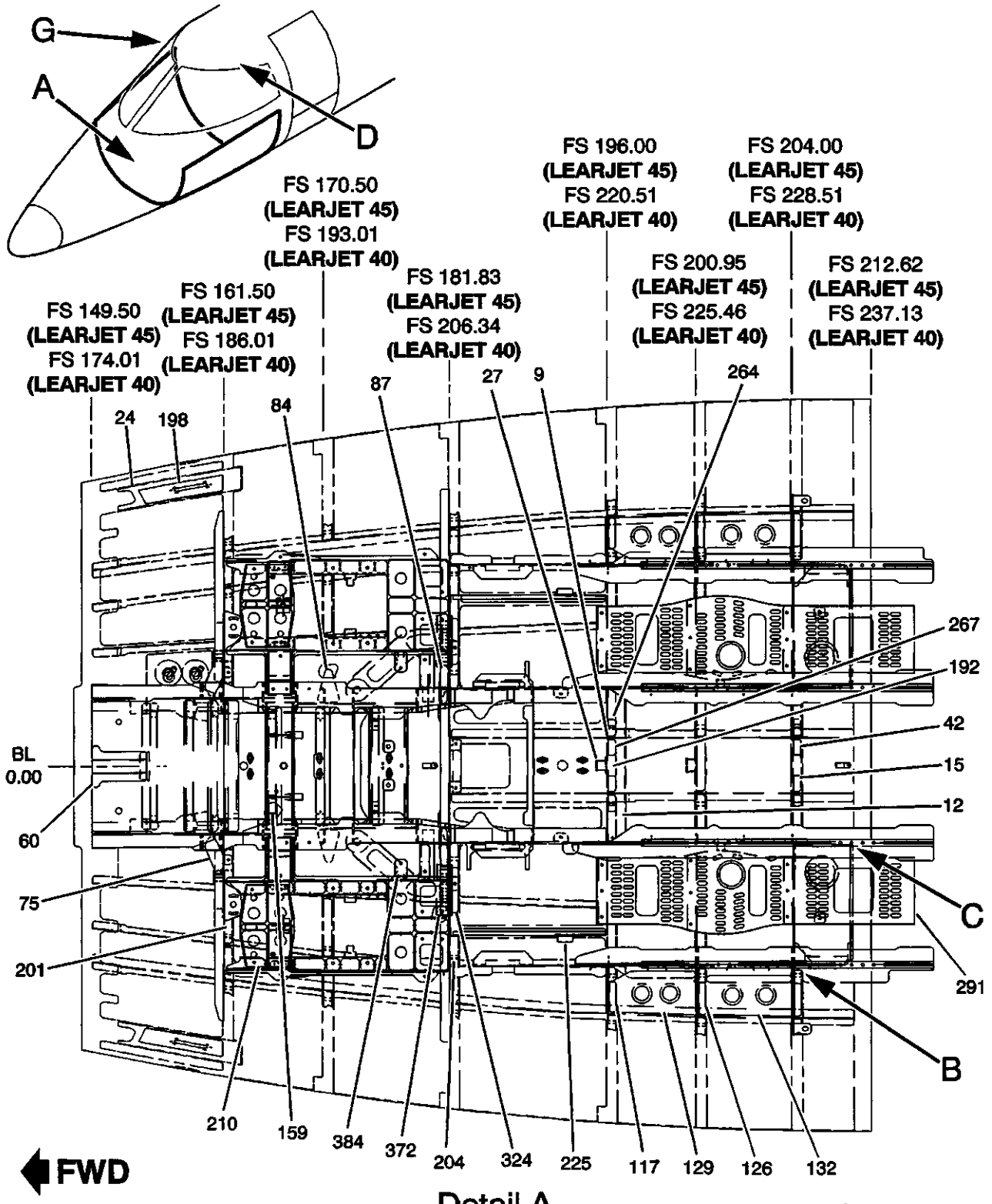

Detail A

S45-531003-001-01

Flight Deck Structure Repair Index
Figure 1 (Sheet 1 of 8)

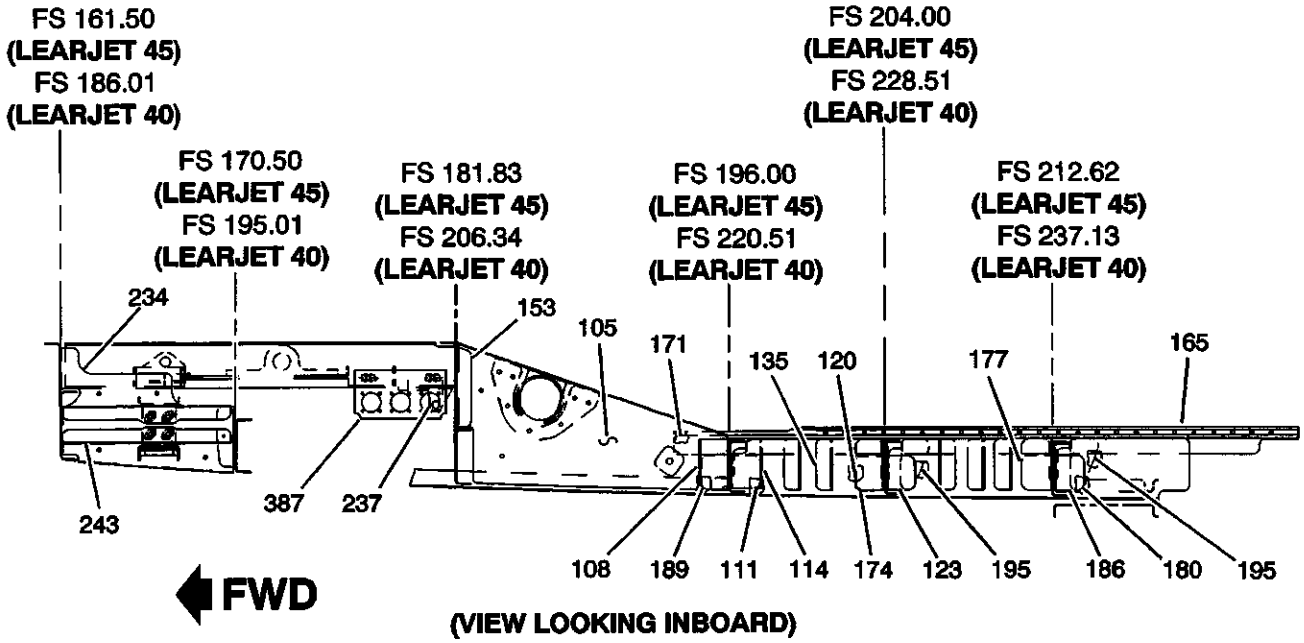

(VIEW LOOKING INBOARD)

Detail B

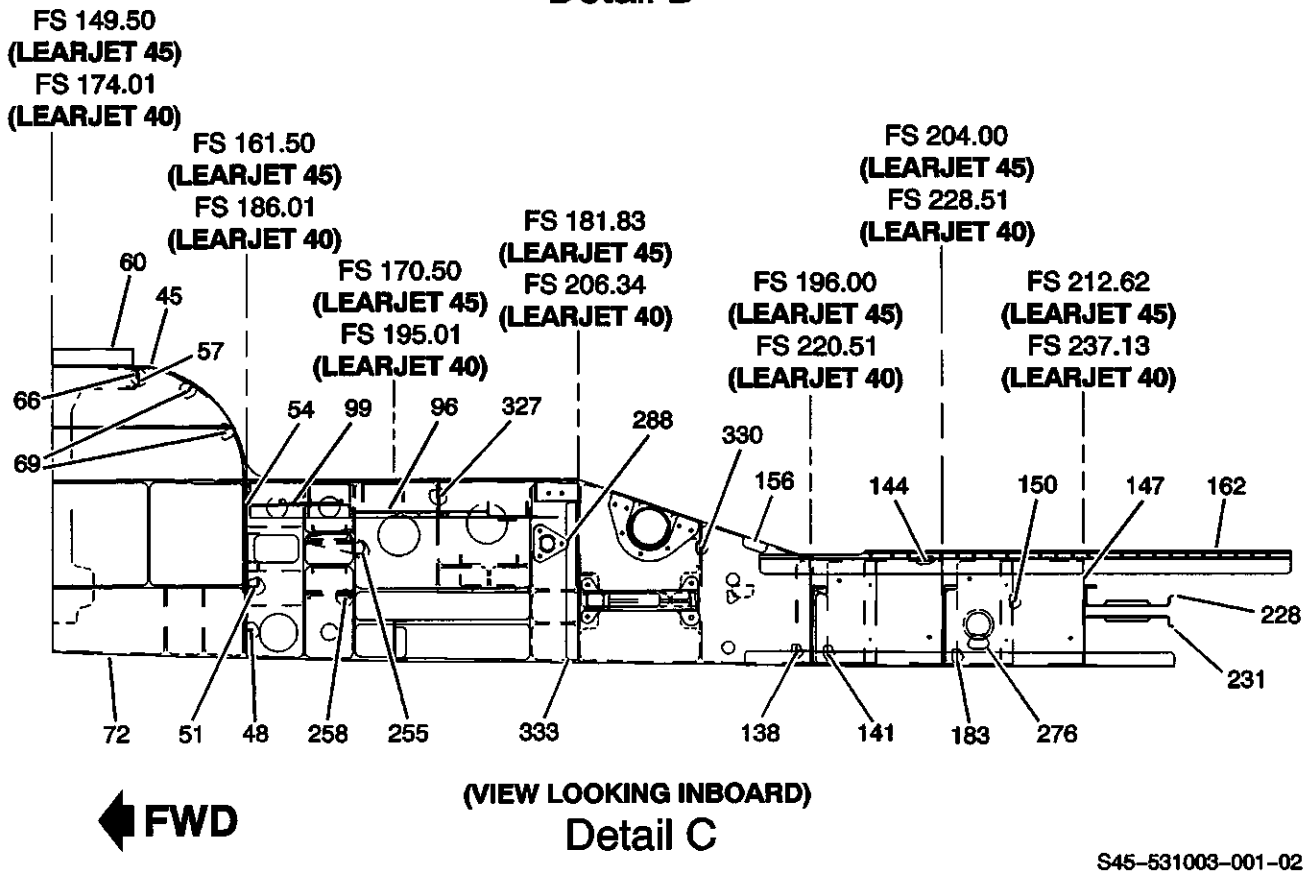

(VIEW LOOKING INBOARD)

Detail C

S45-531003-001-02

Flight Deck Structure Repair Index
Figure 1 (Sheet 2 of 8)

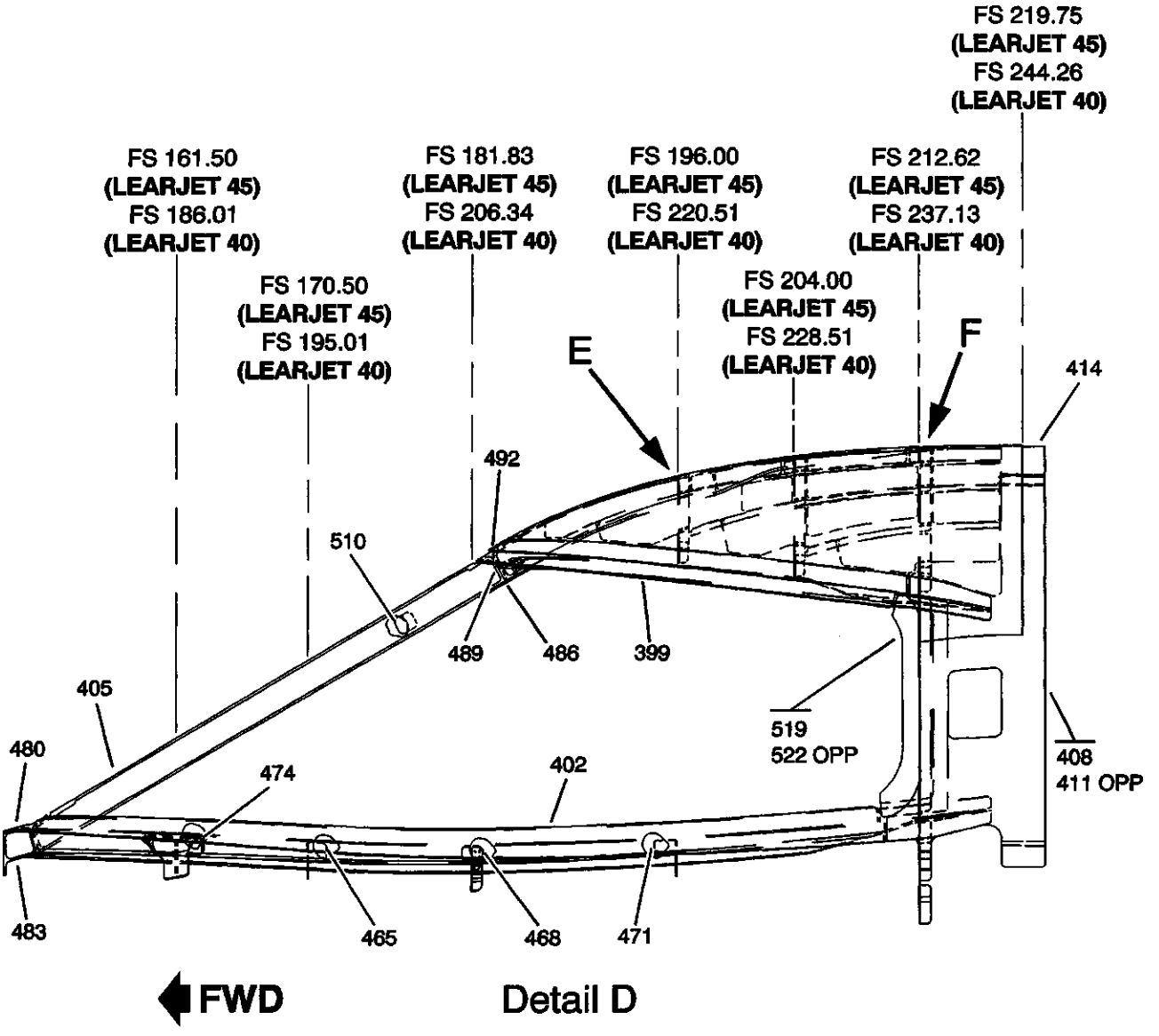

S45-531003-001-03

Flight Deck Structure Repair Index
Figure 1 (Sheet 3 of 8)

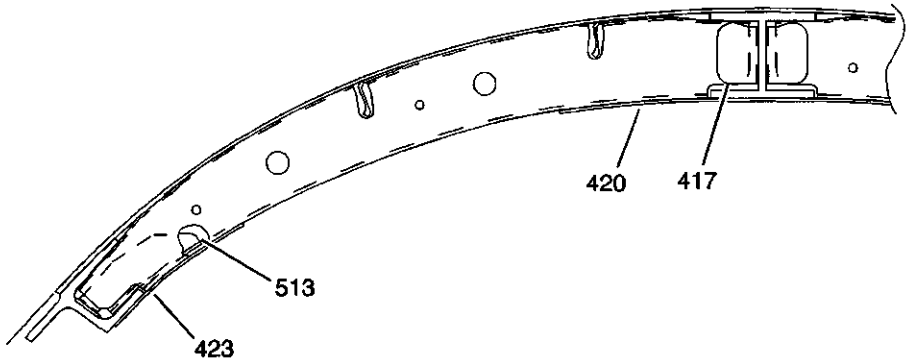

(VIEW LOOKING AFT)

Detail E

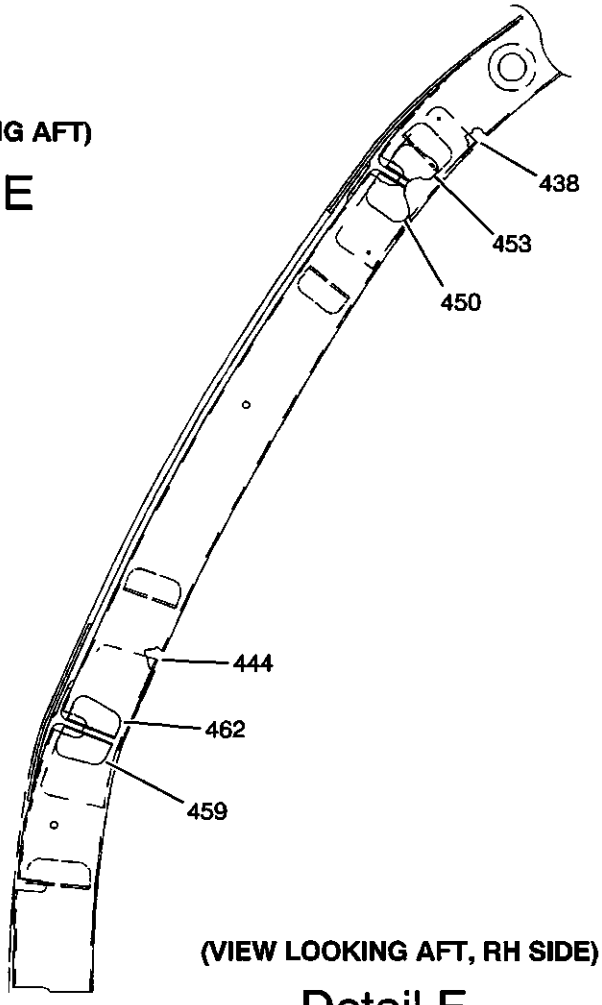

(VIEW LOOKING AFT, RH SIDE)

Detail F

S45-531003-001-04

Flight Deck Structure Repair Index
Figure 1 (Sheet 4 of 8)

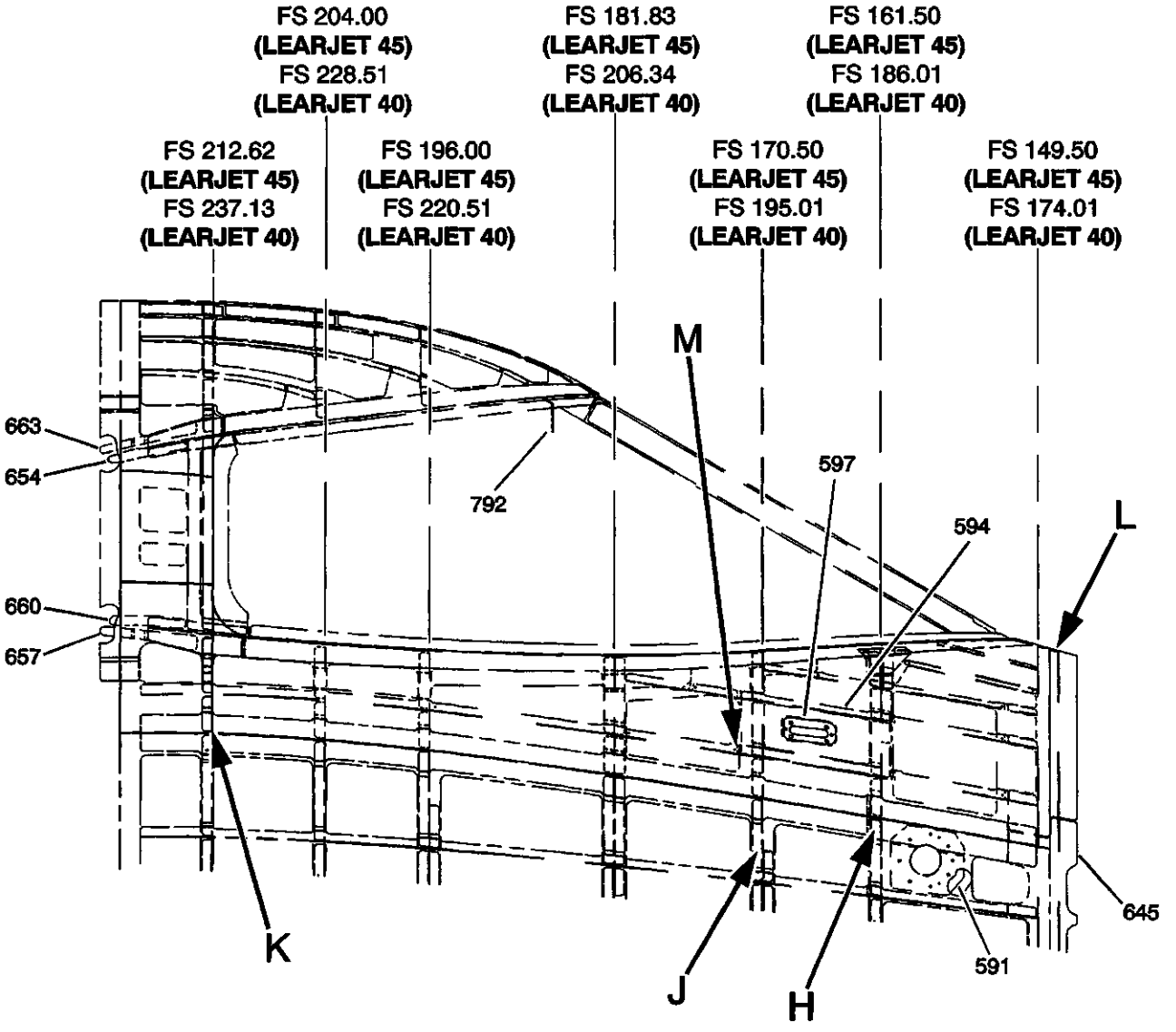

(VIEW LOOKING INBOARD, RH SIDE)
Detail G

FWD

S45-531003-001-05

Flight Deck Structure Repair Index
Figure 1 (Sheet 5 of 8)

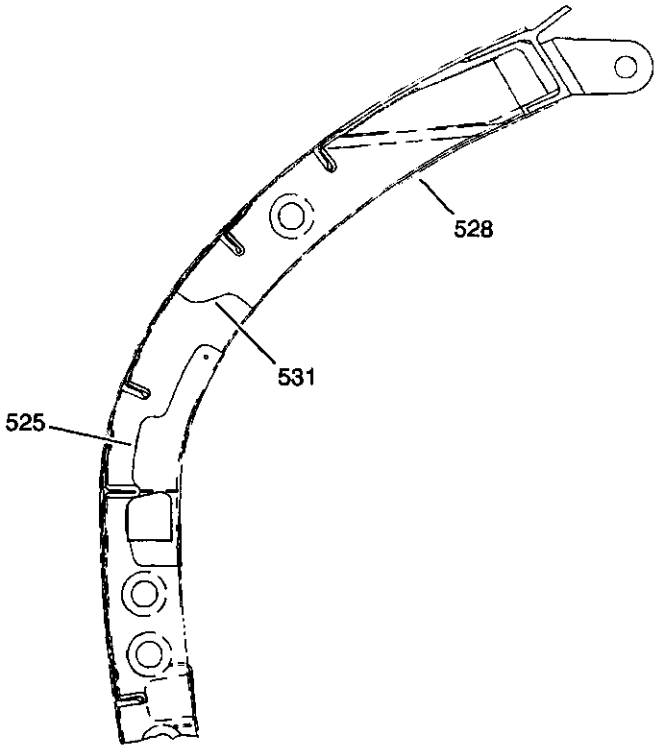

(VIEW LOOKING AFT)

Detail H

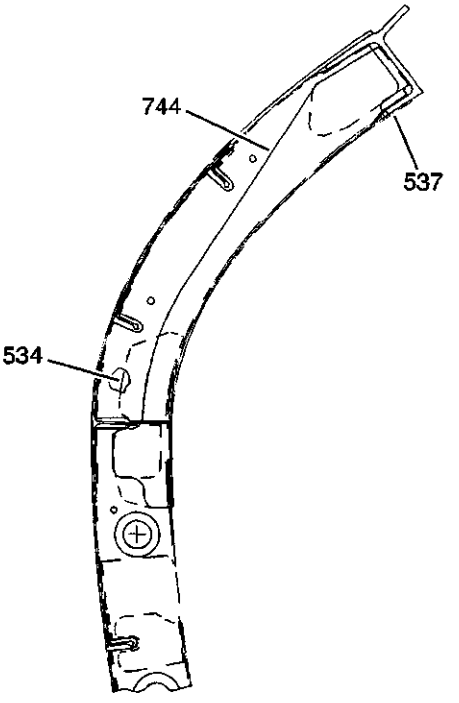

(VIEW LOOKING AFT)

Detail J

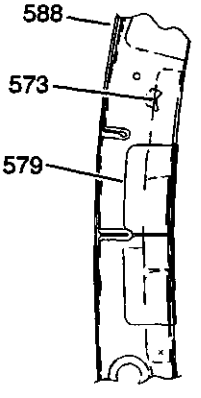

(RH SIDE)

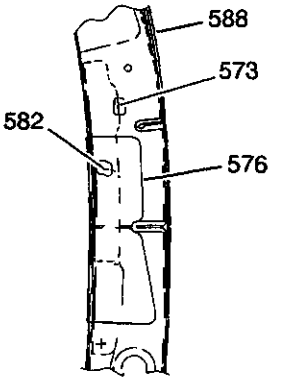

(LH SIDE)

(VIEW LOOKING AFT)

Detail K

S45-531003-001-06

Flight Deck Structure Repair Index
Figure 1 (Sheet 6 of 8)

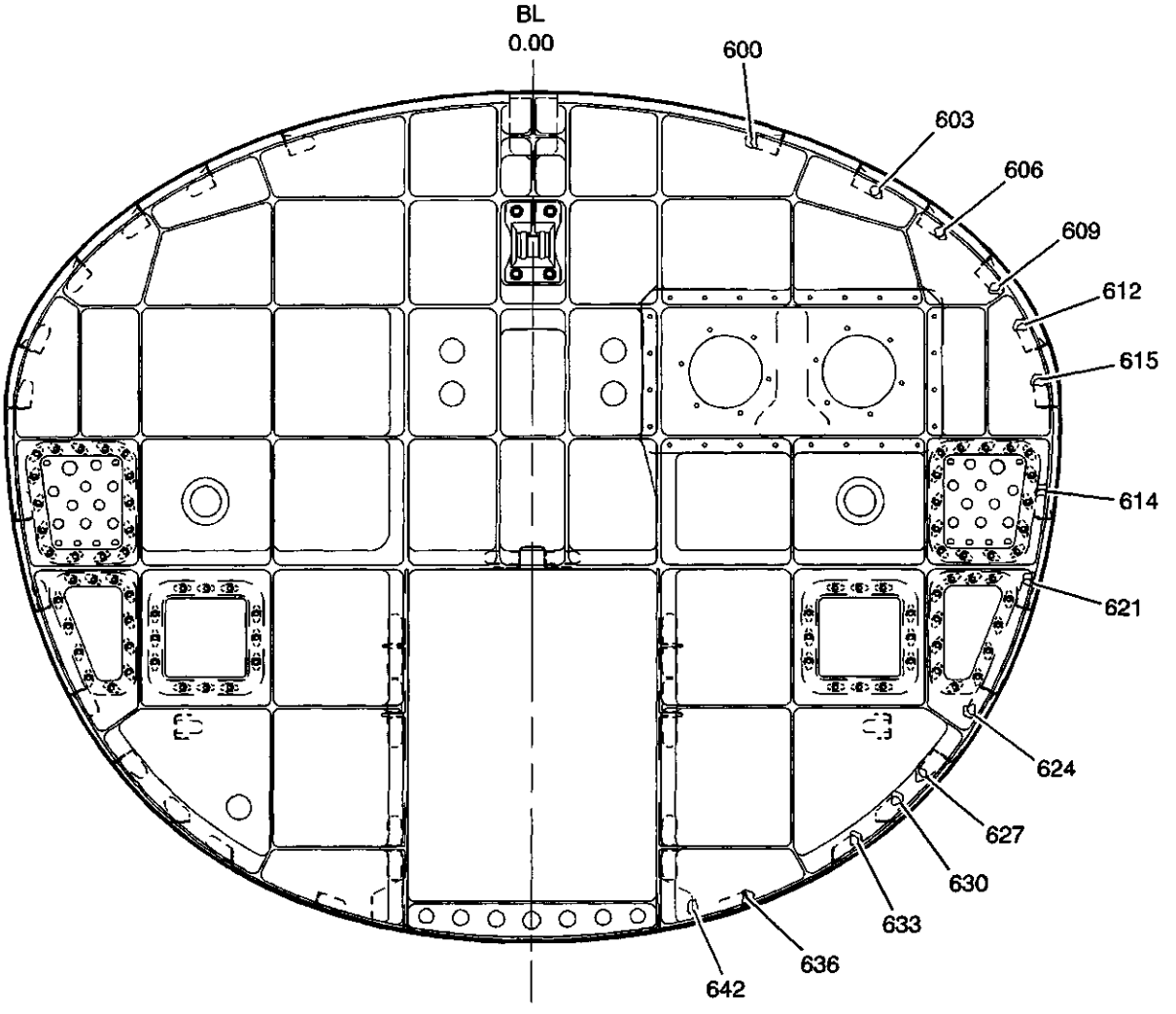

(VIEW LOOKING AFT, LH SHOWN; RH OPPOSITE)

Detail L

S45-531003-001-07

Flight Deck Structure Repair Index
Figure 1 (Sheet 7 of 8)

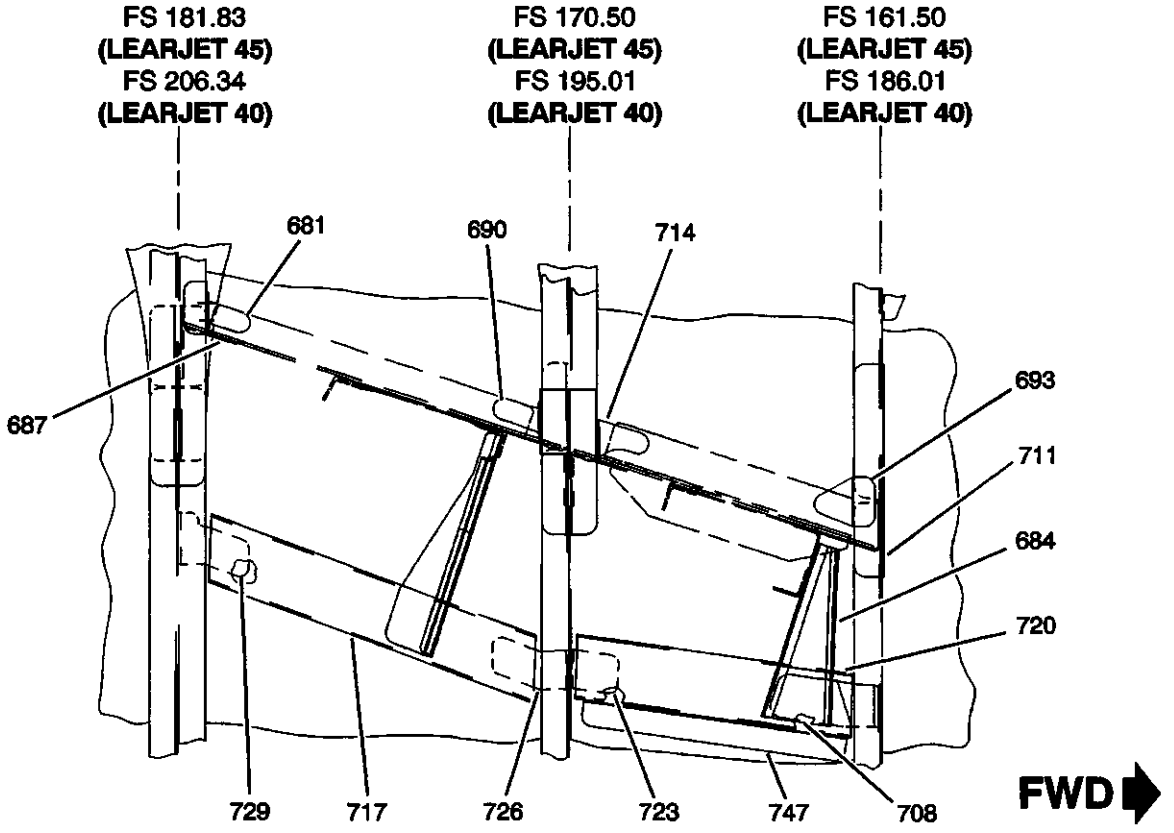

(VIEW LOOKING OUTBOARD, LH SHOWN)

Detail M

S45-531003-001-08

Flight Deck Structure Repair Index
Figure 1 (Sheet 8 of 8)

ITEM NO.	DWG. NO.	DESCRIPTION	EFF CODE	MATERIAL	GAGE	FINISH CODE	REPAIR FIG. NO.
		Flight Deck Assy.					
	4553000001	Nose Fuselage Assy.					
	4553002000	• Flight Deck Assy.	1				
		• Refer to 53-10-05 for Forward Fuselage Frames					
		• Refer to 53-10-10 for Forward Fuselage Stringers					
		• Refer to 53-10-15 for Forward Fuselage Skins					
	4553002001	• • Lower Panel Assy., Flight Deck	1	-	-	-	-
	4553002002	• • • Lower Sub-Assy.	1	-	-	-	-
9	4553201102	• • • • Doubler	1	2024-T3 Clad	0.050	F3-8	Replace
12	4553201106	• • • • Angle	1	2024-T42 Clad	0.050	F3-8	Replace
15	4553201302	• • • • Doubler	1	2024-T3 Clad	0.050	F3-8	Replace
-	4553201305	• • • • Angle, LH & RH	1	2024-T42 Clad	0.050	F3-8	Replace
-	4553208074	• • • • Pad, Washer (36 ea.)	1	2024-T3 Clad	0.063	F3-8	Replace
24	4553206007	• • • • Doubler, LH & RH Pitot	1	2024-T42 Clad	0.050	F3-8	Replace
27	4521202015	• • • • Bracket	1	2024-T42 Clad	0.040	F3-8	Replace
-	4521202030	• • • • Bracket (2 ea.)	1	2024-T42 Clad	0.040	F3-8	Replace
-	4521202035	• • • • Bracket	1	2024-T3 Clad	0.040	F3-8	Replace
-	4521202014	• • • • Bracket	1	2024-T42 Clad	0.040	F3-8	Replace
-	4553201105	• • • • Angle, LH & RH	1	2024-T42 Clad	0.050	F3-8	Replace
42	4553201306	• • • • Angle	1	2024-T42 Clad	0.050	F3-8	Replace
45	4525701050	• • • Panel, Aft	1	2024-T3 Clad	0.050	F3-8	Replace
48	4525701051	• • • Channel Stiffener	1	2024-T42 Clad	0.050	F3-8	Replace
51	4525701052	• • • Channel Stiffener	1	2024-T3 Clad	0.063	F3-8	Replace
54	4525701053	• • • Support Angle	1	7075-T651	▷	F3-8	Replace
57	4525701054	• • • Zee Stiffener	1	2024-T42 Clad	0.050	F3-8	Replace
60	4525701055	• • • Stiffener Channel	1	2024-T3 Clad	0.050	F3-8	Replace
66	4525701056	• • • Attachment Angle	1	2024-T3 Clad	0.050	F3-8	Replace
		- Not Illustrated					

Flight Deck Structure Repair Index
Table 1 (Sheet 1 of 11)

ITEM NO.	DWG. NO.	DESCRIPTION	EFF CODE	MATERIAL	GAGE	FINISH CODE	REPAIR FIG. NO.
69	4525701059	• • • Stiffener Angle (2 ea.)	1	2024-T42 Clad	0.050	F3-8	Replace
72	4553208001 [2]	• • • Longeron, LH & RH	1	7075-T7351	-	F3-8	Replace
75	4553208005	• • • Gusset FS 161.50 (2 ea.)	13	2024-T3 Clad	0.050	F3-8	Replace
-	4553208005	• • • Gusset FS 186.01 (2 ea.)	14	2024-T3 Clad	0.050	F3-8	Replace
-	4553208007	• • • Stiffener Angle (2 ea.)	1	2024-T3 Clad	0.050	F3-8	Replace
-	4553208008	• • • Angle, LH & RH	1	2024-T3 Clad	0.050	F3-8	Replace
84	4553208009 [3]	• • • Gusset FS 170.50 (2 ea.)	13	2024-T3 Clad	0.050	F3-8	Replace
-	4553208009 [3]	• • • Gusset FS 195.01 (2 ea.)	14	2024-T3 Clad	0.050	F3-8	Replace
87	4553208010	• • • Gusset FS 181.83 (2 ea.)	13	2024-T3 Clad	0.050	F3-8	Replace
-	4553208010	• • • Gusset FS 206.34 (2 ea.)	14	2024-T3 Clad	0.050	F3-8	Replace
-	4553208011	• • • Angle, LH & RH	1	2024-T42 Clad	0.050	F3-8	Replace
-	4553208012	• • • Angle, LH & RH	1	2024-T42 Clad	0.050	F3-8	Replace
96	4553208013	• • • Support, LH & RH Rudder	1	7050-T7451 Plate	3.000	F3-8	Replace
99	4553208014	• • • Angle, LH & RH Brake Transducer	1	7050-T7451 Plate	1.750	F3-8	Replace
-	4553208015	• • • Angle, LH & RH	1	2024-T3 Clad	0.050	F3-8	Replace
105	4553208018 [4]	• • • Diaphragm, LH & RH BL 18	1	7075-T73 Clad	0.050	F3-8	Replace
-	455300200117	• • • Mount Bracket, LH & RH	1	2024-T42 Clad	0.050	F3-8	Replace
-	4553208019	• • • Angle, LH & RH	1	2024-T42 Clad	0.063	F3-8	Replace
111	4553208020	• • • Stringer Angle, LH & RH #16	1	2024-T42 Clad	0.063	F3-8	Replace
114	4553208021	• • • Stringer Angle, LH & RH #16	1	2024-T42 Clad	0.063	F3-8	Replace
117	4553208022	• • • Angle, LH & RH	1	2024-T3 Clad	0.050	F3-8	Replace
120	4553208023	• • • Angle, LH & RH (2 ea.)	1	2024-T42 Clad	0.080	F3-8	Replace
123	4553208024	• • • Angle, LH & RH	1	2024-T42 Clad	0.080	F3-8	Replace
126	4553208025	• • • Angle, LH & RH (2 ea.)	1	2024-T3 Clad	0.050	F3-8	Replace
129	4553208026	• • • Diaphragm, LH & RH	1	2024-T42 Clad	0.050	F3-8	Replace
132	4553208027	• • • Diaphragm, LH & RH	1	2024-T42 Clad	0.050	F3-8	Replace
135	4553208028	• • • Angle, Stiffener (10 ea.)	1	2024-T42 Clad	0.080	F3-8	Replace
138	4553208029	• • • Angle, LH & RH	1	2024-T3 Clad	0.040	F3-8	Replace
141	4553208030	• • • Angle, LH & RH	1	2024-T42 Clad	0.040	F3-8	Replace
144	4553208032	• • • Diaphragm, LH & RH	1	2024-T3 Clad	0.040	F3-8	Replace
147	4553208033	• • • Diaphragm, LH & RH - Not Illustrated	1	2024-T42 Clad	0.040	F3-8	Replace

Flight Deck Structure Repair Index
Table 1 (Sheet 2 of 11)

ITEM NO.	DWG. NO.	DESCRIPTION	EFF CODE	MATERIAL	GAGE	FINISH CODE	REPAIR FIG. NO.
150	4553208034	• • • Stiffener (4 ea.)	1	2024-T3 Clad	0.050	F3-8	Replace
153	4553208035	• • • Angle, LH & RH	1	2024-T3 Clad	0.063	F3-8	Replace
156	4553208036	• • • Support Angle (2 ea.)	1	2024-T42 Clad	0.050	F3-8	Replace
159	4553208037	• • • Zee Stiffener (2 ea.)	1	2024-T42 Clad	0.050	F3-8	Replace
162	4553208055	• • • Seat Rail, LH & RH BL 7	1	7075-T6511	7	F3-8 6	Replace
165	4553208056 5	• • • Seat Rail, RBL 18	1	7075-T6511	7	F3-8 6	Replace
-	4553208081 5	• • • Seat Rail, LBL 18	1	7075-T6511	7	F3-8 6	Replace
171	4553208057	• • • Filler, BL18 (2 ea.)	1	2024-T3 Clad	0.050	F3-8	Replace
174	4553208058	• • • Angle, LH & RH	1	2024-T42 Clad	0.080	F3-8	Replace
177	4553208060	• • • Angle, LH & RH	1	2024-T3 Clad	0.063	F3-8	Replace
180	4553208061	• • • Angle, LH & RH	1	2024-T3 Clad	0.063	F3-8	Replace
183	4553208063	• • • Angle, LH & RH	1	2024-T3 Clad	0.040	F3-8	Replace
186	4553208064	• • • Angle, LH & RH	1	2024-T3 Clad	0.063	F3-8	Replace
189	4553208072	• • • Angle, LH & RH	1	2024-T42 Clad	0.063	F3-8	Replace
192	4553208073	• • • Plate, Fairlead (3 ea.)	1	2024-T3 Clad	0.050	F3-8	Replace
195	4553208079	• • • Gusset (4 ea.)	1	2024-T3 Clad	0.063	F3-8	Replace
198	4553206008	• • • Plate, LH & RH Pitot	4	2024-T3 Clad	0.160	F3-8	Replace
201	4553200803	• • • Diaphragm, LH & RH FS 161.50	13	2024-T42 Clad	0.050	F3-8	Replace
-	4553200803	• • • Diaphragm, LH & RH FS 186.01	14	2024-T42 Clad	0.050	F3-8	Replace
204	4553201003	• • • Diaphragm, LH & RH FS 181.83	13	2024-T42 Clad	0.050	F3-8	Replace
-	4553201003	• • • Diaphragm, LH & RH FS 206.34	14	2024-T42 Clad	0.050	F3-8	Replace
-	4553201006	• • • Diaphragm, Center	1	2024-T42 Clad	0.050	F3-8	Replace
210	4527102046	• • • Channel, LH & RH	1	2024-T42 Clad	0.063	F3-8	Replace
-	4527102047	• • • Mounting Bracket (2 ea.)	1	2024-T3Clad	0.040	F3-8	Replace
-	4527102048	• • • Doubler, Pulley (8 ea.)	1	2024-T3 Clad	0.040	F3-8	Replace
-	4527102049	• • • Attachment Angle (2 ea.)	1	2024-T3 Clad	0.040	F3-8	Replace
-	4527102078	• • • Attachment Angle (2 ea.)	1	2024-T3 Clad	0.040	F3-8	Replace
225	4527102079	• • • Guard Bracket (2 ea.)	1	2024-T42 Clad	0.040	F3-8	Replace
228	4527102051	• • • Mounting Bracket, LH & RH	1	2024-T42 Clad	0.050	F3-8	Replace
231	4527102052	• • • Mounting Bracket, LH & RH	1	2024-T42 Clad	0.050	F3-8	Replace
234	4527202078	• • • Diaphragm, LH & RH	1	2024-T3 Clad	0.050	F3-8	Replace
237	4527202084	• • • Actuator Bracket (2 ea.) - Not Illustrated	1	7075-T7351		F3-8	Replace

Flight Deck Structure Repair Index
Table 1 (Sheet 3 of 11)

ITEM NO.	DWG. NO.	DESCRIPTION	EFF CODE	MATERIAL	GAGE	FINISH CODE	REPAIR FIG. NO.
-	4527202084	• • • Angle, LH & RH	1	2024-T3 Clad	0.050	F3-8	Replace
243	4527202096	• • • Angle, LH & RH	1	2024-T3 Clad	0.040	F3-8	Replace
-	4527202124	• • • Doubler (2 ea.)	1	2024-T3 Clad	0.050	F3-8	Replace
-	4527202125	• • • Angle, LH & RH	1	2024-T3 Clad	0.040	F3-8	Replace
255	4527202105	• • • Mounting Plate	1	7075-T7351	2.000	F3-8	Replace
258	4527202106	• • • Channel	1	7075-T7351	0.500	F3-8	Replace
-	4527202119	• • • Angle, LH & RH	1	2024-T3 Clad	0.040	F3-8	Replace
264	4527302084	• • • Angle, LH & RH	1	2024-T42 Clad	0.050	F3-8	Replace
267	4527302085	• • • Angle, LH & RH	1	2024-T42 Clad	0.050	F3-8	Replace
-	4527302093	• • • Angle, Elevator Pulley (2 ea.)	1	2024-T42 Clad	0.050	F3-8	Replace
-	4527302094	• • • Angle, LH & RH	1	2024-T42 Clad	0.050	F3-8	Replace
276	4521202012	• • • Support Bracket (2 ea.)	1	2024-T42 Clad	0.040	F3-8	Replace
-	4521202016	• • • Support Bracket	1	2024-T42 Clad	0.050	F3-8	Replace
-	4527202162 ▷9	• • • Plate, Guard Pin (4 ea.)	1	2024-T3 Clad	0.050	F3-8	Replace
-	4527302065	• • • Guard Bracket (2 ea.)	1	2024-T3 Clad	0.040	F3-8	Replace
288	4532402029	• • • Fitting, Parking Brake (2 ea.)	1	7075-T7351	▷9	F3-8	Replace
291	4520008027	• • • Cable Tray LH & RH	1	2024-T42 Clad	0.020	F3-8	Replace
-	4520008184	• • • Support Angle, LH	1	2024-T3 Clad	0.032	F3-8	Replace
-	4520008028	• • • Support Angle, RH	1	2024-T42 Clad	0.040	F3-8	Replace
-	4520008185	• • • Support Angle, LH	1	2024-T42Clad	0.032	F3-8	Replace
-	4520008029	• • • Support Angle, RH	1	2024-T42 Clad	0.040	F3-8	Replace
-	4520008187	• • • Support Angle, LH	1	2024-T3 Clad	0.032	F3-8	Replace
-	4520008030	• • • Support Angle, RH	1	2024-T42 Clad	0.040	F3-8	Replace
-	4527202163	• • • Channel (2 ea.)	1	7075-T7351	1.000	F3-8	Replace
-	4520008043	• • • Packer (4 ea.)	1	2024-T42 Clad	0.050	F3-8	Replace
-	4520008044	• • • Packer (2 ea.)	1	2024-T3 Clad	0.050	F3-8	Replace
-	4527302064	• • • Guard Bracket (2 ea.)	1	2024-T42 Clad	0.040	F3-8	Replace
324	4527302077	• • • Support Angle (2 ea.)	1	2024-T3 Clad	0.040	F3-8	Replace
327	4532302027	• • • Channel	1	2024-T42 Clad	0.050	F3-8	Replace
330	4553208080	• • • Channel	1	2024-T42 Clad	0.050	F3-8	Replace
333	4527302100	• • • Bracket, LH & RH - Not Illustrated	1	7075-T7351	3.000	F3-8	Replace

Flight Deck Structure Repair Index
Table 1 (Sheet 4 of 11)

ITEM NO.	DWG. NO.	DESCRIPTION	EFF CODE	MATERIAL	GAGE	FINISH CODE	REPAIR FIG. NO.
-	4553002001V20	• • • Mating Structure, Pitot Static	4	10			Replace
-	4553206017	• • • Pitot Plate, LH & RH	4	2024-T351 Clad	0.160	F3-8	Replace
-	4527201264	• • • Pad, Stress Relief (2 ea.)	1	2024-T3 Clad	0.063	F3-8	Replace
-	4532302091	• • • Support Channel (2 ea.)	1	7075-T76 Plate	0.063	F3-8	Replace
-	12645-112	• • • Support Installation, LH & RH	1				
-	12645-112	• • • • Channel, LH & RH Upper & Lwr	1	7075-T7351Bar	11	F3-8	Replace
-	12645-112	• • • • Clip (2 ea.)	1	2024T42 Clad	0.063	F3-8	Replace
-	12645-112	• • • • Web (2 ea.)	1	2024T42 Clad	0.050	F3-8	Replace
-	12645-112	• • • • Angle (2 ea.)	1	2024T42 Clad	0.040	F3-8	Replace
-	4553002001V13	• • • Doubler, LH & RH	3	7075-T73 Clad	0.050	F3-8	Replace
-	4527202093	• • • Support Channel, LH & RH	1	7075-T6	0.063	F3-8	Replace
-	4527202095	• • • Angle, LH & RH	1	2024-T3 Clad	0.040	F3-8	Replace
372	4520008134	• • • Bracket (2 ea.)	1	2024-T3 Clad	0.040	F3-8	Replace
-	4532302030 12	• • • Mounting Plate, Cable	1	2024-T42 Clad	0.040	F3-8	Replace
-	4532302080	• • • Angle, Support (4 ea.)	1	2024-T3 Clad	0.032	F3-8	Replace
384	4532302083	• • • Support Bracket	1	2024-T42Clad	0.040	F3-8	Replace
387	4520008338	• • • Bracket, Breakplug	1	2024-T42 Clad	0.040	F3-8	Replace
-	4520008135	• • • Bracket Clip (4 ea.)	1	2024-T3 Clad	0.040	F3-8	Replace
-	4521202009	• • • Support Angle	1	2024-T3 Clad	0.040	F3-8	Replace
-	4553002003	• • Canopy Assy., Flight Deck	1	2024-T42 Clad	0.080	F3-8	Replace
399	4556100006	• • • Rail, LH & RH Upper Canopy	1	2024-T42 Clad	0.080	F3-8	Replace
402	4556100007	• • • Rail, LH & RH Lower Canopy	1	2024-T3 Clad	0.050	F3-8	Replace
405	4556100008	• • • Center Post	1	2024-T3 Clad	0.050	F3-8	Replace
408	4553206014	• • • Splice Doubler, LH	1	2024-T42 Clad	0.080	F3-8	Replace
411	4553206015	• • • Splice Doubler, RH	1	2024-T3 Clad	0.050	F3-8	Replace
414	4553208070	• • • Splice Strap, Upper	1	2024-T3 Clad	0.050	F3-8	Replace
417	4553201156	• • • Angle, LH & RH	1	2024-T3 Clad	0.050	F3-8	Replace
-	4553201157	• • • Gusset	1	2024-T3 Clad	0.063	F3-8	Replace
		- Not Illustrated					

Flight Deck Structure Repair Index
Table 1 (Sheet 5 of 11)

ITEM NO.	DWG. NO.	DESCRIPTION	EFF CODE	MATERIAL	GAGE	FINISH CODE	REPAIR FIG. NO.
-	4553201158	• • • Gusset, LH & RH	1	2024-T3 Clad	0.063	F3-8	Replace
-	4553201160	• • • Filler (2 ea.)	1	2024-T3 Clad	0.040	F3-8	Replace
-	4553201161	• • • Filler, Tapered (2 ea.)	1	2024-T3 Clad	2.000	F3-8	Replace
-	4553201162	• • • Filler (2 ea.)	1	2024-T3 Clad	0.063	F3-8	Replace
-	4553201254	• • • Gusset, LH & RH	1	2024-T42 Clad	0.063	F3-8	Replace
438	4553201353	• • • Angle, LH & RH	1	2024-T42 Clad	0.040	F3-8	Replace
-	4553201354	• • • Angle, LH	1	2024-T42 Clad	0.040	F3-8	Replace
444	4553201355	• • • Angle, RH	1	2024-T42 Clad	0.040	F3-8	Replace
-	4553201359	• • • Angle, LH & RH	1	2024-T3 Clad	0.040	F3-8	Replace
450	4553201360	• • • Angle, LH & RH	1	2024-T3 Clad	0.050	F3-8	Replace
453	4553201361	• • • Angle, LH & RH	1	2024-T3 Clad	0.050	F3-8	Replace
-	4553201362	• • • Angle, LH & RH	1	2024-T3 Clad	0.040	F3-8	Replace
459	4553201363	• • • Angle, LH & RH	1	2024-T3 Clad	0.040	F3-8	Replace
462	4553201364	• • • Angle, LH & RH	1	2024-T3 Clad	0.040	F3-8	Replace
465	4553200954	• • • Angle, LH & RH	1	2024-T42 Clad	0.050	F3-8	Replace
468	4553201054	• • • Bracket, LH & RH	1	7075-T351 Bar	2.000	F3-8	Replace
471	4553201154	• • • Angle, LH & RH	1	2024-T3 Clad	0.050	F3-8	Replace
474	4553200854	• • • Splice Fitting, LH & RH	1	7075-T7351	2.500	F3-8	Replace
-	4553200856	• • • Bracket, LH & RH	1	7075-T7351	2.500	F3-8	Replace
480	4556100009	• • • Attach Fitting	1	7050-T7451	4.100	F3-8	Replace
483	4556100010	• • • Joint Strap, Lwr	1	7050-T73 Clad	0.120	F3-8	Replace
486	4556100011	• • • Joint Strap, Upper	1	7050-T73 Clad	0.100	F3-8	Replace
489	4556100012	• • • Attach Fitting	1	7075-T7351	1.500	F3-8	Replace
492	4553208000	• • • Center Post, Upper	1	7075-T7451		F3-8	Replace
-	4553208084	• • • Filler	1	2024-T3 Clad	0.040	F3-8	Replace
-	4553208085	• • • Filler	1	2024-T3 Clad	0.032	F3-8	Replace
-	4553208086	• • • Shim, Laminated	1	13	0.031	F3-8	Replace
-	4553208087	• • • Filler	1	2024-T3 Clad	0.020	F3-8	Replace
-	4553208088	• • • Shim, Laminated	1	13	0.031	F3-8	Replace
510	4535102008	• • • Clip, Oxygen	1	2024-T42 Clad	0.040	F3-8	Replace
513	4535201159	• • • Angle, LH & RH	1	2024-T42 Clad	0.040	F3-8	Replace
-	4553201253	• • • Angle, LH & RH	1	2024-T3 Clad	0.063	F3-8	Replace
		- Not Illustrated					

Flight Deck Structure Repair Index
Table 1 (Sheet 6 of 11)

ITEM NO.	DWG. NO.	DESCRIPTION	EFF CODE	MATERIAL	GAGE	FINISH CODE	REPAIR FIG. NO.
519	4556100013	• • • Doubler	1	7075-T7351	0.190	F3-8	Replace
522	4556100014	• • • Doubler	1	7075-T7351	0.190	F3-8	Replace
525	4553200804	• • Splice Angle (2 ea.)	1	2024-T42 Clad	0.050	F3-8	Replace
528	4553200853	• • Gusset, LH & RH	1	2024-T3 Clad	0.063	F3-8	Replace
531	4553200860	• • Frame	1	2024-T42 Clad	0.050	F3-8	Replace
534	4553200904	• • Splice Angle, LH & RH	1	2024-T42 Clad	0.050	F3-8	Replace
537	4553200953	• • Gusset, LH & RH	1	2024-T3 Clad	0.050	F3-8	Replace
540	4553201055	• • Channel, LH & RH	1	2024-T42 Clad	0.050	F3-8	Replace
543	4553201004	• • Splice Angle, LH & RH (2 ea.)	1	2024-T42 Clad	0.050	F3-8	Replace
546	4553201053	• • Gusset, LH & RH	1	2024-T3 Clad	0.063	F3-8	Replace
549	4553201155	• • Angle, LH & RH	1	2024-T42 Clad	0.050	F3-8	Replace
552	4553201104	• • Splice Angle, LH & RH	1	2024-T42 Clad	0.050	F3-8	Replace
555	4553201108	• • Splice Angle, LH & RH	1	2024-T42 Clad	0.050	F3-8	Replace
558	4553201153	• • Gusset, LH & RH	1	2024-T3 Clad	0.063	F3-8	Replace
561	4553201255	• • Angle, LH & RH	1	2024-T42 Clad	0.050	F3-8	Replace
564	4553201204	• • Splice Angle, LH & RH	1	2024-T42 Clad	0.050	F3-8	Replace
567	4553201205	• • Splice Angle, Aft (2 ea.)	1	2024-T42 Clad	0.050	F3-8	Replace
570	4553201256	• • Gusset, LH & RH	1	2024-T3 Clad	0.063	F3-8	Replace
573	4553201356	• • Angle, LH & RH	1	2024-T42 Clad	0.050	F3-8	Replace
576	4553201304	• • Splice Angle, LH	1	2024-T42 Clad	0.050	F3-8	Replace
579	4553201308	• • Splice Angle, RH	1	2024-T42 Clad	0.050	F3-8	Replace
582	4553201309	• • Angle, Splice, LH	1	2024-T42 Clad	0.050	F3-8	Replace
585	4553201310	• • Angle, Splice, RH	1	2024-T42 Clad	0.050	F3-8	Replace
588	4553206001	• • Apron, Skin Panel	1	2024-T42 Clad	0.050	⊳	51-70-02
591	4553206010	• • Mounting Plate, LH & RH A.O.A.	1	2024-T351	0.250	F3-8	Replace
594	4553206011	• • Doubler, Standby Pitot	1	2024-T42 Clad	0.050	F3-8	Replace
597	4553206012	• • Mounting Plate	1	2024-T351	0.160	F3-8	Replace
600	4553208039	• • Attach Angle, LH & RH Stgr 5	1	2024-T42 Clad	0.040	F3-8	Replace
603	4553208040	• • Attach Angle, LH & RH Stgr 6	1	2024-T42 Clad	0.040	F3-8	Replace
606	4553208041	• • Attach Angle, LH & RH Stgr 7	1	2024-T42 Clad	0.040	F3-8	Replace
		- Not Illustrated					

Flight Deck Structure Repair Index
Table 1 (Sheet 7 of 11)

ITEM NO.	DWG. NO.	DESCRIPTION	EFF CODE	MATERIAL	GAGE	FINISH CODE	REPAIR FIG. NO.
609	4553208042	• • Attach Angle, LH & RH Stgr 8	1	2024-T42 Clad	0.040	F3-8	Replace
612	4553208043	• • Attach Angle, LH & RH Stgr 9	1	2024-T42 Clad	0.040	F3-8	Replace
615	4553208044	• • Attach Angle, LH & RH Stgr 10	1	2024-T42 Clad	0.040	F3-8	Replace
618	4553208045	• • Attach Angle, LH & RH Stgr 11	1	2024-T42 Clad	0.040	F3-8	Replace
621	4553208046	• • Attach Angle, LH & RH Stgr 12	1	2024-T42 Clad	0.040	F3-8	Replace
624	4553208047	• • Attach Angle, LH & RH Stgr 13	1	2024-T42 Clad	0.040	F3-8	Replace
627	4553208048	• • Attach Angle, LH & RH Stgr 14	1	2024-T42 Clad	0.040	F3-8	Replace
630	4553208049	• • Attach Angle, LH & RH Stgr 15	1	2024-T42 Clad	0.040	F3-8	Replace
633	4553208050	• • Attach Angle, LH & RH Stgr 16	1	2024-T42 Clad	0.040	F3-8	Replace
636	4553208051	• • Attach Angle, LH & RH Stgr 17	1	2024-T42 Clad	0.040	F3-8	Replace
-	4553208004	• • Channel (2 ea.)	1	2024-T42 Clad	0.050	F3-8	Replace
642	4553208052	• • Seal Angle (2 ea.)	1	2024-T42 Clad	0.063	F3-8	Replace
645	4553208053	• • Butt Strap, Lwr	1	2024-T3 Clad	0.050	F3-8	Replace
648	4553208054	• • Attach Angle (2 ea.)	1	2024-T3 Clad	0.040	F3-8	Replace
-	4553208065	• • Strap	1	2024-T3 Clad	0.090	F3-8	Replace
654	4553208066	• • Strap, LH & RH	1	2024-T3 Clad	0.090	F3-8	Replace
657	4553208067	• • Strap	1	7475-T7351 [15]		F3-8	Replace
660	4553208068	• • Strap	1	2024-T3 Clad	0.090	F3-8	Replace
663	4553208069	• • Strap	1	7475-T7351 [15]		F3-8	Replace
-	4553208076	• • Attach Angle (10 ea.)	1	2024-T3 Clad	0.063	F3-8	Replace
-	4553208077	• • Attach Angle (2 ea.)	1	2024-T3 Clad	0.063	F3-8	Replace
-	4553208083	• • Splice Angle (2 ea.)	1	2024-T3 Clad	0.050	F3-8	Replace
-	7653206208	• • Spring Clip (4 ea.)	1	[16]			Replace
-	4553208074	• • Filler (2 ea.)	1	2024-T3 Clad	0.063	F3-8	Replace
681	4525108067 [17]	• • Angle	1	2024-T3 Clad	0.040	F3-8	Replace
		- Not Illustrated					

Flight Deck Structure Repair Index
Table 1 (Sheet 8 of 11)

ITEM NO.	DWG. NO.	DESCRIPTION	EFF CODE	MATERIAL	GAGE	FINISH CODE	REPAIR FIG. NO.
684	4525108089	• • Support Bracket	1	2024-T3 Clad	0.063	F3-8	Replace
687	4525108007	• • Support Bracket	1	2024-T3 Clad	0.050	F3-8	Replace
690	4525108009	• • Support Angle	1	2024-T3 Clad	0.050	F3-8	Replace
693	4525108011	• • Gusset	1	2024-T3 Clad	0.040	F3-8	Replace
-	4525108012	• • Channel	1	2024-T42 Clad	0.032	F3-8	Replace
-	4525108013	• • Angle	1	2024-T42 Clad	0.032	F3-8	Replace
-	4525108014	• • Bracket, Lwr	1	2024-T3 Clad	0.050	F3-8	Replace
-	4525108018	• • Channel (2 ea.)	1	2024-T3 Clad	0.050	F3-8	Replace
708	4525108024	• • Support Angle (2 ea.)	1	2024-T42 Clad	0.050	F3-8	Replace
711	4525108036	• • Cleat, Support (2 ea.)	1	2024-T42 Clad	0.050	F3-8	Replace
714	4525108037	• • Support Bracket (2 ea.)	1	2024-T3 Clad	0.050	F3-8	Replace
717	4525108038	• • Channel Support (2 ea.)	1	2024-T3 Clad	0.063	F3-8	Replace
720	4525108039	• • Channel Support (2 ea.)	1	2024-T3 Clad	0.063	F3-8	Replace
723	4525108042	• • Support Angle (2 ea.)	1	2024-T3 Clad	0.050	F3-8	Replace
726	4525108043	• • Support Bracket (2 ea.)	1	2024-T3 Clad	0.050	F3-8	Replace
729	4525108044	• • Support Angle (2 ea.)	1	2024-T3 Clad	0.050	F3-8	Replace
-	4525108046	• • Attach Angle (2 ea.)	1	2024-T3 Clad	0.050	F3-8	Replace
-	4525108047	• • Angle (2 ea.)	20	2024-T3 Clad	0.063	F3-8	Replace
-	4525108048	• • Angle (2 ea.)	1	2024-T3 Clad	0.040	F3-8	Replace
-	4525108049	• • Angle (2 ea.)	1	2024-T3 Clad	0.040	F3-8	Replace
744	4553200955	• • Angle, LH & RH	1	2024-T42 Clad	0.050	F3-8	Replace
747	4520008086	• • Angle, G.P. Mounting (2 ea.)	1	2024-T3 Clad	0.032	F3-8	Replace
-	4553208091	• • Bolt, Shouldered (2 ea.)	1	18			Replace
-	4553208089	• • Filler	20	2024-T3 Clad	0.040	F3-8	Replace
-	4553208090	• • Shim, Laminated	1	19		F3-8	Replace
-	4553200855	• • Doubler, LH	1	2024-T42 Clad	0.050	F3-8	Replace
-	4525108073	• • Bracket (2 ea.)	1	2024-T3 Clad	0.050	F3-8	Replace
-	4525108074	• • Bracket (2 ea.)	1	2024-T3 Clad	0.050	F3-8	Replace
-	4525108076	• • Bracket (2 ea.)	1	2024-T3 Clad	0.050	F3-8	Replace
-	4525108078	• • Bracket (2 ea.)	1	2024-T3 Clad	0.050	F3-8	Replace
-	4525108079	• • Bracket (2 ea.)	1	2024-T3 Clad	0.050	F3-8	Replace
-	4525108086	• • Bracket (2 ea.)	1	2024-T3 Clad	0.050	F3-8	Replace
		- Not Illustrated					

Flight Deck Structure Repair Index
Table 1 (Sheet 9 of 11)

ITEM NO.	DWG. NO.	DESCRIPTION	EFF CODE	MATERIAL	GAGE	FINISH CODE	REPAIR FIG. NO.
-	4535102009	• • Bracket (2 ea.)	1	2024-T3 Clad	0.050	F3-8	Replace
-	4520008339	• • Bracket (2 ea.)	1	2024-T42 Clad	0.050	F3-8	Replace
-	4525108096	• • Support Bracket (4 ea.)	1	2024-T3 Clad	0.040	F3-8	Replace
789	4520008174	• • Bracket, Connector	6	2024-T3 Clad	0.040	F3-8	Replace
792	4524208024 ▷	• • Mounting Angle, Stby Compass	1	2024-T3 Clad	0.080	F3-8	Replace
-	4553002000V5	• • Socket, LH & RH Mic/Phone	7	2024-T3 Clad	0.071	F3-8	Replace
-	4553002000V5	• • Mounting Angle (6 ea.)	7	2024-T3 Clad	0.063	F3-8	Replace
-	4525108103	• • Support Angle	12	2024-T42 Clad	0.063	F3-8	Replace
-	4520008174	• • Bracket, Connector	11	2024-T3 Clad	0.040	F3-8	Replace
-	4534208025	• • Cleat	8	2024-T3 Clad	0.063	F3-8	Replace
-	4534208026	• • Plate, LH & RH	8	2024-T3 Clad	0.071	F3-8	Replace
		- Not Illustrated					

EFFECTIVITY CODE	AIRCRAFT SERIAL NUMBERS
1	45-005 AND SUBSEQUENT
2	45-005
3	45-005 THRU 45-014
4	45-005 THRU 45-031
5	45-032 AND SUBSEQUENT
6	45-005 THRU 45-011
7	45-005 THRU 45-035
8	45-036 AND SUBSEQUENT
9	45-008 AND SUBSEQUENT
10	45-010 AND SUBSEQUENT
11	45-012 AND SUBSEQUENT
12	45-027 AND SUBSEQUENT
13	45-005 AND SUBSEQUENT
14	45-2001 AND SUBSEQUENT

Flight Deck Structure Repair Index
Table 1 (Sheet 10 of 11)

NOTES

1. Make from SB07 01 141 extrusion
2. On Aircraft 45-004 thru 45-019 refer to drawing 4553002001V9. On Aircraft 45-020 and Subsequent refer to drawing 4553002001V10
3. Refer to drawing 4553002001V7 & 14
4. Refer to drawing 4553002001V17
5. Refer to drawing 4553002001V18 & 19
6. Finish the upper side of the seat rail, excluding the upstanding leg, F3-8-1, finish upstanding leg F3-10
7. Make from SB07 09 004 extrusion
8. Refer to drawing 4553002001V10
9. 3.50 round bar
10. Make from 12145-061-001
11. Stock 1.25 x 2.8 x 12.0
12. On Aircraft 45-008 and Subsequent refer to drawing 4553002001V11
13. Make from LS3 BS 1449 CS 4.031
14. Finish interior F3-8, Exterior F3
15. AMS 4202
16. Vendor part Springco Co., Northern Ireland
17. 45-005 thru 45-035 refer to drawing 4553002000V4
18. Made from NAS6308-16 bolt
19. MIL-S-22499, Comp. 3, Type 1, Class 1
20. Effectivity for Aircraft 45-001, 45-002, 45-027 and Subsequent. On Aircraft 45-003 thru 45-026 refer to drawing 4553001005V5
21. Refer to drawing 4553002000V10

Flight Deck Structure Repair Index
Table 1 (Sheet 11 of 11)

FLIGHT DECK STRUCTURE - ALLOWABLE DAMAGE

1. Allowable Damage Limits

NOTE: All dimensions are in inches unless otherwise specified.

A. Fasteners
(1) Loose or failed rivets are not allowed. A loose or failed rivet can cause increased stress concentrations on the remaining rivets and lead to progressive joint failure. A careful inspection must be performed to ensure that joint failure has not spread from the area of the loose or failed rivet. (Refer to 51-40-05 for definition of rivet failure.)
(2) Loose or failed screws are not allowed. A loose or failed screw can cause increased stress concentrations on surrounding screws and lead to progressive joint failure. A careful inspection must be performed to ensure that the joint failure has not spread from the area of the loose or failed screw.

B. Cracks
(1) Cracks in any fitting or forging are not allowed. Cracked fittings or forgings must be replaced.
(2) Cracks in components other than fittings and forgings are considered allowable if properly repaired and refinished in accordance with 51-70-00.

C. Deformation
(1) Deformation of the flight deck structure is not allowed.

D. Corrosion (See Figure 101.)
(1) Corrosion damage is permissible if the affected area is properly repaired, refinished in accordance with 51-30-15 and these repairs do not reduce the original material thickness more than specified. (Refer to 51-70-00.)
(2) Structural components must be repaired or replaced if corrosion repair reduces the original material thickness more than specified.

E. Dents
(1) Dents are permissible if smooth and without abrupt changes in contour, do not exceed 0.100 inch (2.54 mm) in depth, do not exceed 10% of total surface area in one (1) square foot, and are not closer than 0.50 inch (12.7 mm) to any rivet or structural area.
(2) Dents are not allowed if sharp, a fracture of the skin has occurred greater than 0.100 inch (2.54 mm) in depth, exceeds 10% of the total surface area in one (1) square foot, and are closer than 0.50 inch (12.7 mm) to a rivet or structural area. Such dents shall be repaired or the component replaced.

F. Scratches (See Figure 101.)
(1) Scratches are permissible if the affected area is sanded smooth, refinished in accordance with 51-70-00, and the repairs do not reduce the original material thickness more than specified. (Refer to 51-30-15 for protective treatment procedures.)
(2) Structural components must be replaced or repaired if scratches reduce the original material thickness by more than specified.

G. Nicks (See Figure 101.)
   (1) Nicks are permissible if the affected area is sanded smooth, refinished in accordance with 51-70-00, and the repairs do not reduce the original material thickness more than specified. (Refer to 51-30-15 for protective treatment procedures.)
   (2) Structural components must be replaced or repaired if nicks reduce the original material thickness more than specified.

H. Fittings and Forgings
   (1) Fittings or forgings must be replaced if cracked or if fitting hole (non-bushed) tolerance exceeds the allowable limits. (Refer to 51-70-00.)
   (2) Fittings or forgings with bushing shall be repaired.

Nominal Thickness (Inch)	Minimum Thickness (Inch)
0.016	0.0135
0.020	0.0175
0.025	0.0225
0.032	0.0295
0.040	0.0370
0.050	0.0460
0.063	0.0590
0.071	0.0670
0.080	0.0760
0.100	0.0950
0.125	0.1200
0.190	0.1800
0.250	0.2370

Allowable Material Thickness
Figure 101

1. Repairs

A. Refer to 51-70-00 for typical repairs and allowable wear and repair data.

FORWARD FUSELAGE FRAMES - STRUCTURAL IDENTIFICATION

1. Description (See Figure 1 and Table 1.)

A. The forward fuselage frame assemblies consist of frames, doublers, web assemblies, and structural subassemblies.

B. The forward fuselage frames provide overall structural continuity and aerodynamics of the aircraft.

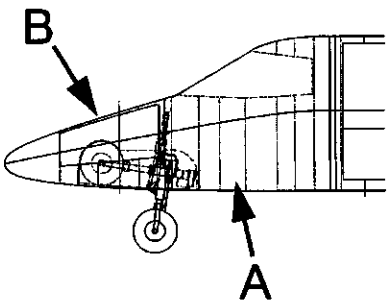

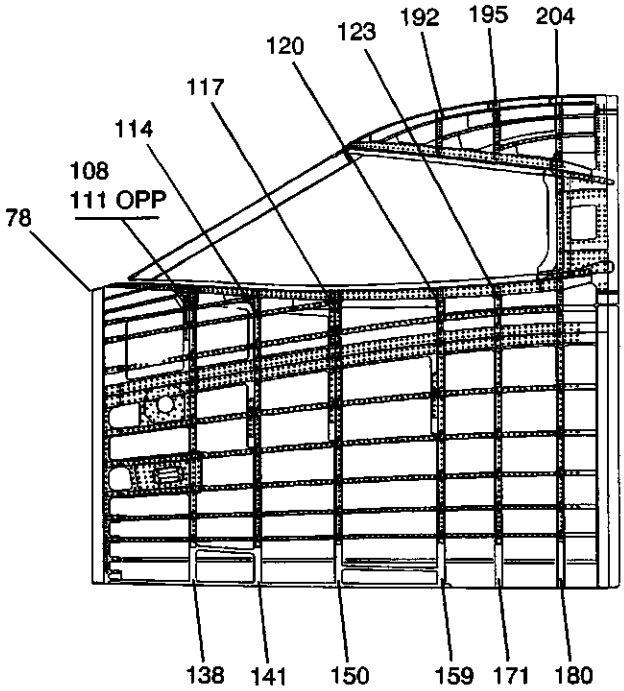

(LEFT SIDE)

Detail A

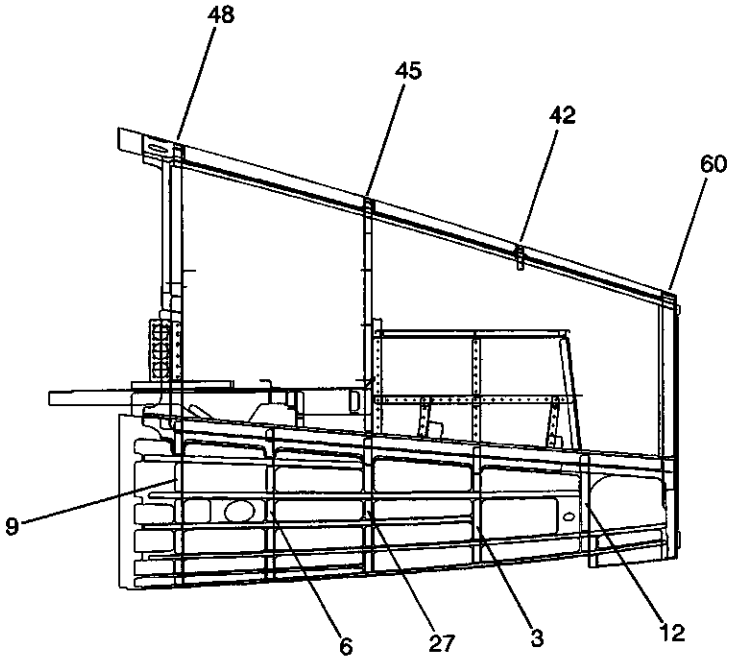

(RIGHT SIDE)

Detail B

S45-531005-001-01

Forward Fuselage Frames Repair Index
Figure 1

ITEM NO.	DWG. NO.	DESCRIPTION	EFF CODE	MATERIAL	GAGE	FINISH CODE	REPAIR FIG. NO.
		Forward Fuselage Frames	1				
	4553001000	• Nose Extension Assy.	1				
	4553001001	• • Lower Panel, Nose Extension Frames	1				
3	4553100301	• • • Frame, LH & RH FS 116.76	2	2024-T42 Clad	0.032	F3-8	Replace
-	4553100301	• • • Frame, LH & RH FS 141.27	3	2024-T42 Clad	0.032	F3-8	Replace
6	4553100501	• • • Frame, LH & RH FS 135.00	2	2024-T42 Clad	0.032	F3-8	Replace
-	4553100501	• • • Frame, LH & RH FS 159.51	3	2024-T42 Clad	0.032	F3-8	Replace
9	4553100601	• • • Frame, LH & RH FS 143.00	2	2024-T42 Clad	0.040	F3-8	Replace
-	4553100601	• • • Frame, LH & RH FS 167.51	3	2024-T42 Clad	0.040	F3-8	Replace
12	4553100200	• • • Frame Assy. FS 107.25	2	-	-	-	-
-	4553100201	• • • • Frame, Lwr	2	2024-T42 Clad	0.040	F3-8	Replace
-	4553100204	• • • • Frame, LH Lwr	2	2024-T42 Clad	0.040	F3-8	Replace
-	4553100205	• • • • Frame, RH Lwr	2	2024-T42 Clad	0.040	F3-8	Replace
-	4553100206	• • • • Angle, Reinforcement	2	2024-T42 Clad	0.032	F3-8	Replace
-	4553100200	• • • Frame Assy. FS 131.76	3	-	-	-	-
-	4553100201	• • • Frame, Lwr	3	2024-T42 Clad	0.040	F3-8	Replace
-	4553100204	• • • Frame, LH Lwr	3	2024-T42 Clad	0.040	F3-8	Replace
-	4553100205	• • • Frame, RH Lwr	3	2024-T42 Clad	0.040	F3-8	Replace
-	4553100206	• • • Angle, Reinforcement	3	2024-T42 Clad	0.032	F3-8	Replace
27	4553100400	• • • Frame Assy., LH & RH FS126.35	2	-	-	-	-
-	4553100401	• • • • Segment, Lwr (2 ea.)	2	2024-T42 Clad	0.040	F3-8	Replace
-	4553100402	• • • • Angle, Reinforcement (2 ea.)	2	2024-T42 Clad	0.050	F3-8	Replace
-	4553100400	• • • Frame Assy., LH & RH FS150.86	3	-	-	-	-
-	4553100401	• • • • Segment, Lwr (2 ea.)	3	2024-T42 Clad	0.040	F3-8	Replace
-	4553100402	• • • • Angle, Reinforcement (2 ea.)	3	2024-T42 Clad	0.050	F3-8	Replace
-	4553001002	• • Upper Panel, Nose Extension Frames	1	-	-	-	-
42	4553100251	• • • Frame, Upper FS 112.96	2	2024-T42 Clad	0.032	F3-8	Replace
-	4553100251	• • • Frame, Upper FS 137.47	3	2024-T42 Clad	0.032	F3-8	Replace
45	4553100451	• • • Frame FS 126.35	2	2024-T42 Clad	0.040	F3-8	Replace
-	4553100451	• • • Frame FS 150.86	3	2024-T42 Clad	0.042	F3-8	Replace
48	4553100650	• • • Frame Assy. FS 143.00	2	-	-	-	-

Forward Fuselage Frames Repair Index
Table 1 (Sheet 1 of 4)

ITEM NO.	DWG. NO.	DESCRIPTION	EFF CODE	MATERIAL	GAGE	FINISH CODE	REPAIR FIG. NO.
-	4553100651	• • • • Frame, Upper	2	2024-T42 Clad	0.040	F3-8	Replace
-	4553100652	• • • • Angle, LH & RH	2	2024-T42 Clad	0.040	F3-8	Replace
-	4553100650	• • • Frame Assy. FS 167.51	3	-	-	-	-
-	4553100651	• • • • Frame, Upper	3	2024-T42 Clad	0.040	F3-8	Replace
-	4553100652	• • • • Angle, LH & RH	3	2024-T42 Clad	0.040	F3-8	Replace
60	4553100100	• • Bulkhead Assy., Radome Attach FS 99.58	2	-	-	-	-
-	4553100101	• • • Bulkhead	2	7075-T7351 Plate	2.000	F3-8	Replace
-	4553100153	• • • Support, LH & RH Seal	2	2024-T42 Clad	0.040	F3-8	Replace
-	4553100102	• • • Dowel, Radome (2 ea.)	2	1	2	F3-8	Replace
-	7653102000	• • • Diaphragm FS 99.58	2	3	0.122	-	Replace
-	4553100100	• • Bulkhead Assy., Radome Attach FS 124.09	3	-	-	-	-
-	4553100101	• • • Bulkhead	3	7075-T7351 Plate	2.000	F3-8	Replace
-	4553100153	• • • Support, LH & RH Seal	3	2024-T42 Clad	0.040	F3-8	Replace
-	4553100102	• • • Dowel, Radome (2 ea.)	3	1	2	F3-8	Replace
-	7653102000	• • • Diaphragm FS 124.09	3	3	0.122	-	Replace
-	4553002000	• • Flight Deck Assy.	1	-	-	-	-
-	4553200700	• • • Bulkhead Assy.	1	-	-	-	-
-	4553200701	• • • • Bulkhead	1	7475-T7351 Plate	2.500	F3-8	Replace
-	4521302022	• • • • Mounting Plate	1	7075-T7351 Plate	0.250	F3-8	Replace
-	4532302038	• • • • Fitting	1	4	2.500		Replace
-	4553200700	• • • • Carrier Assy. (2 ea.)	1	-	-	-	-
-	4520008034	• • • • Carrier Nutplate	1	2024-T3 Clad	0.040	F3-8	Replace
-	4553200700	• • • • Carrier Assy. (2 ea.)	1	-	-	-	-
-	4520008035	• • • • Carrier Nutplate	1	2024-T3 Clad	0.040	F3-8	Replace
-	4553200700	• • • • Carrier Assy. (2 ea.)	1	-	-	-	-
-	4520008036	• • • • Carrier Nutplate	1	2024-T3 Clad	0.050	F3-8	Replace
108	4553200851	• • • Frame, LH FS 161.50	2	2024-T42 Clad	0.050	F3-8	Replace
-	4553200851	• • • Frame, LH FS 186.01	3	2024-T42 Clad	0.050	F3-8	Replace
111	4553200852	• • • Frame, RH FS 161.50	2	2024-T42 Clad	0.050	F3-8	Replace
-	4553200852	• • • Frame, RH FS 186.01	3	2024-T42 Clad	0.050	F3-8	Replace
114	4553200951	• • • Frame, LH & RH FS 170.50	2	2024-T42 Clad	0.050	F3-8	Replace
-	4553200951	• • • Frame, LH & RH FS 195.01	3	2024-T42 Clad	0.050	F3-8	Replace
117	4553201051	• • • Frame, LH & RH FS 181.83	2	2024-T42 Clad	0.050	F3-8	Replace
-	4553201051	• • • Frame, LH & RH FS 206.34 - Not Illustrated	3	2024-T42 Clad	0.050	F3-8	Replace

Forward Fuselage Frames Repair Index
Table 1 (Sheet 2 of 4)

ITEM NO.	DWG. NO.	DESCRIPTION	EFF CODE	MATERIAL	GAGE	FINISH CODE	REPAIR FIG. NO.
120	4553201151	• • • Frame, LH & RH FS 196.00	2	2024-T42 Clad	0.050	F3-8	Replace
-	4553201151	• • • Frame, LH & RH FS 220.51	3	2024-T42 Clad	0.050	F3-8	Replace
123	4553201251	• • • Frame, LH & RH FS 204.00	2	2024-T42 Clad	0.050	F3-8	Replace
-	4553201251	• • • Frame, LH & RH FS 228.51	3	2024-T42 Clad	0.050	F3-8	Replace
-	4553002001	• • Lower Panel Assy., Flight Deck	1	-	-	-	-
-	4553200902	• • • Frame, Center FS 170.50	2	2024-T42 Clad	0.050	F3-8	Replace
-	4553200902	• • • Frame, Center FS 195.01	3	2024-T42 Clad	0.050	F3-8	Replace
-	4553201002	• • • Frame, Center FS 181.83	2	2024-T42 Clad	0.050	F3-8	Replace
-	4553201002	• • • Frame, Center FS 206.34	3	2024-T42 Clad	0.050	F3-8	Replace
-	4553002002	• • • Lower Sub-Assy., Flight Deck	1	-	-	-	-
138	4553200801	• • • • Frame, LH & RH FS 161.50	2	2024-T42 Clad	0.050	F3-8	Replace
-	4553200801	• • • • Frame, LH & RH FS 186.01	3	2024-T42 Clad	0.050	F3-8	Replace
141	4553200900	• • • • Frame Assy., LH & RH FS 170.50	2	-	-	-	-
-	4553200900	• • • • Frame Assy., LH & RH FS 195.01	3	-	-	-	-
-	4553200901	• • • • • Frame, LH & RH Lwr	1	2024-T42 Clad	0.050	F3-8	Replace
-	4553200903	• • • • • Doubler, LH & RH	1	2024-T42 Clad	0.050	F3-8	Replace
150	4553201000	• • • • Frame Assy., LH & RH FS 181.83	2	-	-	-	-
-	4553201000	• • • • Frame Assy., LH & RH FS 206.34	3	-	-	-	-
-	4553201001	• • • • • Frame, LH & RH Lwr	1	2024-T42 Clad	0.050	F3-8	Replace
-	4553201005	• • • • • Doubler, LH & RH Flanged	1	2024-T42 Clad	0.050	F3-8	Replace
159	4553201100	• • • • Frame Assy. FS 196.00	2	-	-	-	-
-	4553201100	• • • • Frame Assy. FS 220.51	3	-	-	-	-
-	4553201101	• • • • • Frame, Lwr	1	2024-T42 Clad	0.050	F3-8	Replace
-	4553201103	• • • • • Angle, LH & RH	1	2024-T42 Clad	0.040	F3-8	Replace
-	4553201107	• • • • • Doubler, LH & RH Flanged	1	2024-T42 Clad	0.050	F3-8	Replace
171	4553201200	• • • • Frame Assy. FS 204.00	2	-	-	-	-
-	4553201200	• • • • Frame Assy. FS 228.51	3	-	-	-	-
-	4553201203	• • • • • Angle, LH & RH	1	2024-T42 Clad	0.040	F3-8	Replace
-	4553201201	• • • • • Frame, Lwr	1	2024-T42 Clad	0.050	F3-8	Replace
180	4553201300	• • • • Frame Assy. FS 212.62	2	-	-	-	-
-	4553201300	• • • • Frame Assy. FS 237.13	3	-	-	-	-
-	4553201303	• • • • • Angle, LH & RH (2 ea.LH) (1 ea. RH) - Not Illustrated	1	2024-T42 Clad	0.040	F3-8	Replace

Forward Fuselage Frames Repair Index
Table 1 (Sheet 3 of 4)

ITEM NO.	DWG. NO.	DESCRIPTION	EFF CODE	MATERIAL	GAGE	FINISH CODE	REPAIR FIG. NO.
-	4553201301	• • • • • Frame, Lwr	1	2024-T42 Clad	0.050	F3-8	Replace
-	4553002003	• • Panel Assy., Flight Deck Canopy	1	-	-	-	-
192	4553201152	• • • Frame, LH & RH FS 196.00	2	2024-T42 Clad	0.063	F3-8	Replace
-	4553201152	• • • Frame, LH & RH FS 220.51	3	2024-T42 Clad	0.063	F3-8	Replace
195	4553201250	• • • Frame Assy. FS 204.00	2	-	-	F3-8	Replace
-	4553201250	• • • Frame Assy. FS 228.51	3	-	-	F3-8	Replace
-	4553201252	• • • • Frame, Upper	1	2024-T42 Clad	0.063	F3-8	Replace
-	4553201257	• • • • Doubler, LH & RH Frame	1	2024-T42 Clad	0.050	F3-8	Replace
204	4553201350	• • • Frame Assy. FS 212.62	2	-	-	F3-8	Replace
-	4553201350	• • • Frame Assy. FS 237.13	3	-	-	F3-8	Replace
-	4553201352	• • • • Frame, Upper	1	2024-T42 Clad	0.050	F3-8	Replace
-	4553201357	• • • • Doubler, LH & RH Frame	1	2024-T42 Clad	0.050	F3-8	Replace
		- Not Illustrated					

EFFECTIVITY CODE	AIRCRAFT SERIAL NUMBERS
1	45-001 AND SUBSEQUENT
2	45-005 AND SUBSEQUENT
3	45-2001 AND SUBSEQUENT

NOTES

1. 17-4PH Stainless Steel
2. 0.370 Dia. Bar
3. Laminated Sheets, Type III, (615)-5-12, Grade A, SMS 81
4. 6AL4VT1, AMS 4928 Fitting

Forward Fuselage Frames Repair Index
Table 1 (Sheet 4 of 4)

FORWARD FUSELAGE FRAMES - ALLOWABLE DAMAGE

1. Allowable Damage Limits

NOTE: All dimensions are in inches unless otherwise specified.

A. Fasteners
(1) Loose or failed rivets are not allowed. A loose or failed rivet can cause increased stress concentrations on the remaining rivets and lead to progressive joint failure. A careful inspection must be performed to ensure that joint failure has not spread from the area of the loose or failed rivet. (Refer to 51-40-05 for definition of rivet failure.)
(2) Loose or failed screws are not allowed. A loose or failed screw can cause increased stress concentrations on surrounding screws and lead to progressive joint failure. A careful inspection must be performed to ensure that the joint failure has not spread from the area of the loose or failed screw.

B. Cracks
(1) Cracks in any fitting or forging are not allowed. Cracked fittings or forgings must be replaced.
(2) Cracks in components other than fittings and forgings are considered allowable if properly repaired and refinished in accordance with 51-70-00.

C. Deformation
(1) Deformation of the forward fuselage frame structure is not allowed.

D. Corrosion (See Figure 101.)
(1) Corrosion damage is permissible if the affected area is properly repaired, refinished in accordance with 51-30-15 and these repairs do not reduce the original material thickness more than specified. (Refer to 51-70-00.)
(2) Structural components must be repaired or replaced if corrosion repair reduces the original material thickness more than specified.

E. Dents
(1) Dents are permissible if smooth and without abrupt changes in contour, do not exceed 0.100 inch (2.54 mm) in depth, do not exceed 10% of total surface area in one (1) square foot, and are not closer than 0.50 inch (12.7 mm) to any rivet or structural area.
(2) Dents are not allowed if sharp, a fracture of the skin has occurred greater than 0.100 inch (2.54 mm) in depth, exceeds 10% of the total surface area in one (1) square foot, and are closer than 0.50 inch (12.7 mm) to a rivet or structural area. Such dents shall be repaired or the component replaced.

F. Scratches (See Figure 101.)
(1) Scratches are permissible if the affected area is sanded smooth, refinished in accordance with 51-70-00, and the repairs do not reduce the original material thickness more than specified. (Refer to 51-30-15 for protective treatment procedures.)
(2) Structural components must be replaced or repaired if scratches reduce the original material thickness by more than specified.

G. Nicks (See Figure 101.)
   (1) Nicks are permissible if the affected area is sanded smooth, refinished in accordance with 51-70-00, and the repairs do not reduce the original material thickness more than specified. (Refer to 51-30-15 for protective treatment procedures.)
   (2) Structural components must be replaced or repaired if nicks reduce the original material thickness more than specified.

H. Fittings and Forgings
   (1) Fittings or forgings must be replaced if cracked or if fitting hole (non-bushed) tolerance exceeds the allowable limits. (Refer to 51-70-00.)
   (2) Fittings or forgings with bushing shall be repaired.

Nominal Thickness (Inch)	Minimum Thickness (Inch)
0.016	0.0135
0.020	0.0175
0.025	0.0225
0.032	0.0295
0.040	0.0370
0.050	0.0460
0.063	0.0590
0.071	0.0670
0.080	0.0760
0.100	0.0950
0.125	0.1200
0.190	0.1800
0.250	0.2370

Allowable Material Thickness
Figure 101

FORWARD FUSELAGE FRAMES - REPAIR

1. Repairs

A. Refer to 51-70-00 for typical repairs and allowable wear and repair data.

FORWARD FUSELAGE STRINGERS - STRUCTURAL IDENTIFICATION

1. Description (See Figure 1 and Table 1.)

A. The forward fuselage stringers provide longitudinal support of the overall composition of the fuselage. The stringers are located around the perimeter of the frames. The stringers are spaced approximately five inches apart and are made of aluminum extrusion cut to various lengths.

B. The forward fuselage stringers provide overall structural continuity and aerodynamics of the aircraft.

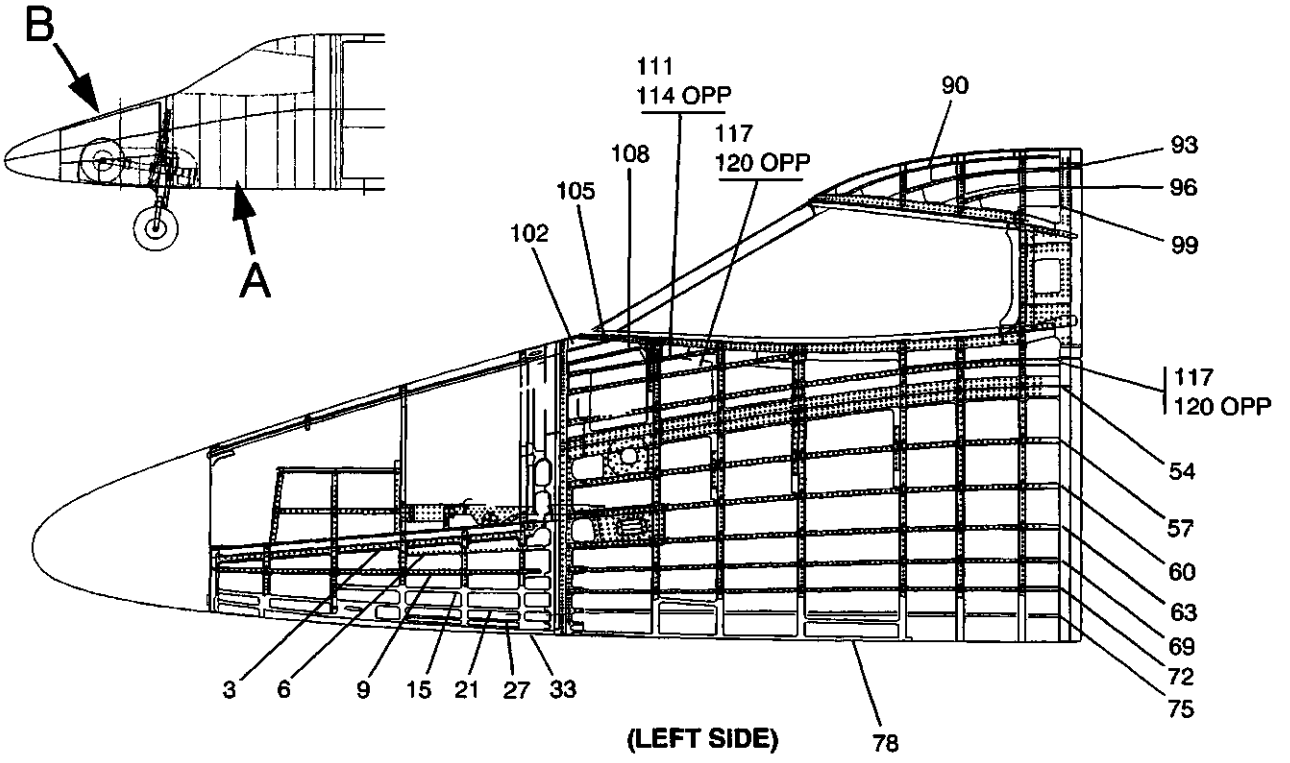

(LEFT SIDE)

Detail A

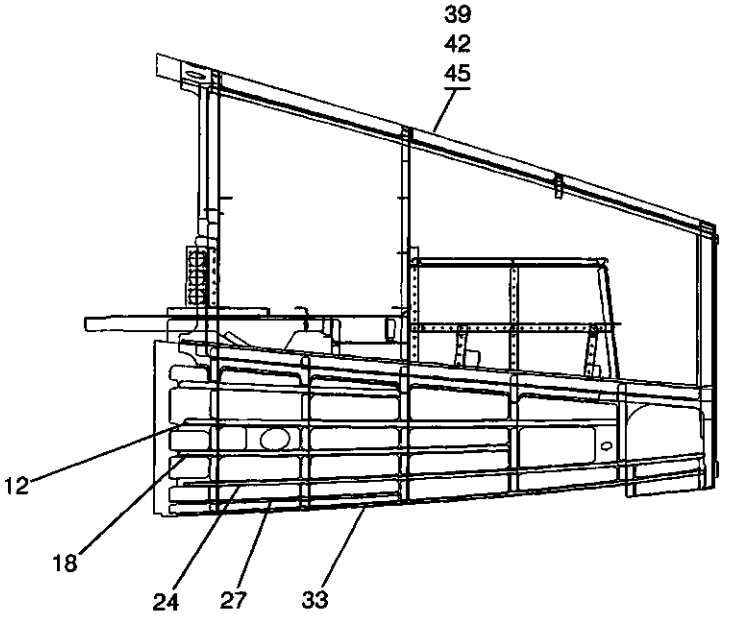

(RIGHT SIDE)

Detail B

S45-531010-001-01

Forward Fuselage Stringers Repair Index

Figure 1

ITEM NO.	DWG. NO.	DESCRIPTION	EFF CODE	MATERIAL	GAGE	FINISH CODE	REPAIR FIG. NO.
	4553000001	Forward Fuselage Stringers	1				
	4553001000	• Nose Extension Assy	1				
	4553001001	• • Nose Extension Lower Panel Stringers	1				
3	4553107003	• • • Stringer, LH & RH No. 12	1	2024-T8511 Extr.	1	F3-8	Replace
6	4553107004	• • • Stringer, LH & RH No. 13	1	2024-T8511 Extr.	2	F3-8	Replace
9	4553107005	• • • Stringer, LH No. 14	1	2024-T8511 Extr.	2	F3-8	Replace
12	4553107010	• • • Stringer, RH No. 14	1	2024-T8511 Extr.	2	F3-8	Replace
15	4553107006	• • • Stringer, LH No. 15	1	2024-T8511 Extr.	2	F3-8	Replace
18	4553107012	• • • Stringer, RH No. 15	1	2024-T8511 Extr.	2	F3-8	Replace
21	4553107007	• • • Stringer, LH No. 16	1	2024-T8511 Extr.	2	F3-8	Replace
24	4553107011	• • • Stringer, RH No. 16	1	2024-T8511 Extr.	2	F3-8	Replace
27	455310700 10	• • • Stringer, LH & RH No. 17	1	2024-T8511 Extr.	4	F3-8	Replace
-	4553001001V3	• • • Laminated Shim	1	11	0.020	F0	Replace
	V7	• • • Splice, Stringer	1	2024-T3 Clad	0.040	F3-8	Replace
	V10	• • • Splice, Stringer	1	2024-T3 Clad	0.040	F3-8	Replace
	V11	• • • Splice, Stringer	1	2024-T3 Clad	0.040	F3-8	Replace
33	4553107009	• • • Stringer, LH & RH No. 18	1	2024-T8511 Extr.	2	F3-8	Replace
-	4553001002	• • Nose Extension, Upper Panel Stringers	1	-	-	F3-8	Replace
39	4553107000	• • • Stringer, No. 0	1	2024-T8511 Extr.	2	F3-8	Replace
42	4553107001	• • • Stringer, LH & RH No. 2	1	2024-T8511 Extr.	2	F3-8	Replace
45	4553107002	• • • Stringer, LH & RH No. 4	1	2024-T8511 Extr.	3	F3-8	Replace
-	4553002000	• • Flight Deck Assy.	1	-	-	F3-8	Replace
-	4553002002	• • • Lower Panel Sub-Assy.	1	-	-	F3-8	Replace
54	4553207010	• • • • Stringer, LH & RH No. 10	1	2024-T8511 Extr.	5	F3-8	Replace
57	4553207011	• • • • Stringer, LH & RH No. 11	1	2024-T8511 Extr.	6	F3-8	Replace
60	4553207012	• • • • Stringer, LH & RH No. 12	1	2024-T8511 Extr.	6	F3-8	Replace
63	4553207013	• • • • Stringer, LH & RH No. 13	1	2024-T8511 Extr.	6	F3-8	Replace
69	4553207014	• • • • Stringer, LH & RH No. 14	1	2024-T8511 Extr.	6	F3-8	Replace
72	4553207015	• • • • Stringer, LH & RH No. 15	1	2024-T8511 Extr.	7	F3-8	Replace
75	4553207016	• • • • Stringer, LH & RH No. 16	1	2024-T8511 Extr.	8	F3-8	Replace
		- Not Illustrated					

Forward Fuselage Stringers Repair Index
Table 1 (Sheet 1 of 2)

ITEM NO.	DWG. NO.	DESCRIPTION	EFF CODE	MATERIAL	GAGE	FINISH CODE	REPAIR FIG. NO.
78	4553207017	• • • • Stringer, LH & RH No. 17	1	2024-T8511 Extr.	6	F3-8	Replace
-	4553207018	• • • • Stringer, LH & RH No. 18	1	2024-T8511 Extr.	9	F3-8	Replace
-	4553207019	• • • • Stringer, LH & RH No. 19	1	2024-T8511 Extr.	6	F3-8	Replace
-	4553002003	• • • Panel Assy., Flight Deck Canopy	1	-	-	F3-8	Replace
90	4553207001	• • • • Stringer, LH & RH No. 1	1	2024-T8511 Extr.	6	F3-8	Replace
93	4553207002	• • • • Stringer, LH & RH No. 2	1	2024-T8511 Extr.	6	F3-8	Replace
96	4553207003	• • • • Stringer, LH & RH No. 3	1	2024-T8511 Extr.	6	F3-8	Replace
99	4553207004	• • • • Stringer, LH & RH No. 4	1	2024-T8511 Extr.	6	F3-8	Replace
102	4553207005	• • • • Stringer, LH & RH No. 5	1	2024-T8511 Extr.	6	F3-8	Replace
105	4553207006	• • • • Stringer, LH & RH No. 6	1	2024-T8511 Extr.	6	F3-8	Replace
108	4553207007	• • • • Stringer, LH & RH No. 7	1	2024-T8511 Extr.	6	F3-8	Replace
111	4553207008	• • • • Stringer, LH No. 8	1	2024-T8511 Extr.	6	F3-8	Replace
114	4553207020	• • • • Stringer, RH No. 8	1	2024-T8511 Extr.	6	F3-8	Replace
117	4553207009	• • • • Stringer, LH No. 9	1	2024-T8511 Extr.	6	F3-8	Replace
120	4553207021	• • • • Stringer, RH No. 9	1	2024-T8511 Extr.	6	F3-8	Replace
		- Not Illustrated					

EFFECTIVITY CODE	AIRCRAFT SERIAL NUMBERS
1	45-005 AND SUBSEQUENT

NOTES

1. SB07 10 016 Extruded Angle
2. SB07 10 012 Extruded Angle
3. SB07 10 015 Extruded Angle
4. SB07 10 017 Extruded Angle
5. SB07 10 002 Extruded Angle
6. SB07 10 001 Extruded Angle
7. SB07 10 003 Extruded Angle
8. SB07 10 004 Extruded Angle
9. SB07 10 005 Extruded Angle
10. On Aircraft 45-005 and Subsequent refer to drawing 4553001001V3, 7, 10 & 11
11. MIL-S-22499/3, Type 2, Class 1

Forward Fuselage Stringers Repair Index
Table 1 (Sheet 2 of 2)

FORWARD FUSELAGE STRINGERS - ALLOWABLE DAMAGE

1. Allowable Damage Limits

NOTE: All dimensions are in inches unless otherwise specified.

A. Fasteners
(1) Loose or failed rivets are not allowed. A loose or failed rivet can cause increased stress concentrations on the remaining rivets and lead to progressive joint failure. A careful inspection must be performed to ensure that joint failure has not spread from the area of the loose or failed rivet. (Refer to 51-40-05 for definition of rivet failure.)
(2) Loose or failed screws are not allowed. A loose or failed screw can cause increased stress concentrations on surrounding screws and lead to progressive joint failure. A careful inspection must be performed to ensure that the joint failure has not spread from the area of the loose or failed screw.

B. Cracks
(1) Cracks in any fitting or forging are not allowed. Cracked fittings or forgings must be replaced.
(2) Cracks in components other than fittings and forgings are considered allowable if properly repaired and refinished in accordance with 51-70-00.

C. Deformation
(1) Deformation of the forward fuselage stringer structure is not allowed.

D. Corrosion (See Figure 101.)
(1) Corrosion damage is permissible if the affected area is properly repaired, refinished in accordance with 51-30-15 and these repairs do not reduce the original material thickness more than specified. (Refer to 51-70-00.)
(2) Structural components must be repaired or replaced if corrosion repair reduces the original material thickness more than specified.

E. Dents
(1) Dents are permissible if smooth and without abrupt changes in contour, do not exceed 0.100 inch (2.54 mm) in depth, do not exceed 10% of total surface area in one (1) square foot, and are not closer than 0.50 inch (12.7 mm) to any rivet or structural area.
(2) Dents are not allowed if sharp, a fracture of the skin has occurred greater than 0.100 inch (2.54 mm) in depth, exceeds 10% of the total surface area in one (1) square foot, and are closer than 0.50 inch (12.7 mm) to a rivet or structural area. Such dents shall be repaired or the component replaced.

F. Scratches (See Figure 101.)
(1) Scratches are permissible if the affected area is sanded smooth, refinished in accordance with 51-70-00, and the repairs do not reduce the original material thickness more than specified. (Refer to 51-30-15 for protective treatment procedures.)
(2) Structural components must be replaced or repaired if scratches reduce the original material thickness by more than specified.

G. Nicks (See Figure 101.)
   (1) Nicks are permissible if the affected area is sanded smooth, refinished in accordance with 51-70-00, and the repairs do not reduce the original material thickness more than specified. (Refer to 51-30-15 for protective treatment procedures.)
   (2) Structural components must be replaced or repaired if nicks reduce the original material thickness more than specified.

H. Fittings and Forgings
   (1) Fittings or forgings must be replaced if cracked or if fitting hole (non-bushed) tolerance exceeds the allowable limits. (Refer to 51-70-00.)
   (2) Fittings or forgings with bushing shall be repaired.

Nominal Thickness (Inch)	Minimum Thickness (Inch)
0.016	0.0135
0.020	0.0175
0.025	0.0225
0.032	0.0295
0.040	0.0370
0.050	0.0460
0.063	0.0590
0.071	0.0670
0.080	0.0760
0.100	0.0950
0.125	0.1200
0.190	0.1800
0.250	0.2370

Allowable Material Thickness
Figure 101

FORWARD FUSELAGE STRINGERS - REPAIR

1. Repairs

A. Refer to 51-70-00 for typical repairs and allowable wear and repair data.

FORWARD FUSELAGE SKINS - STRUCTURAL IDENTIFICATION

1. Description (See Figure 1 and Table 1.)

A. The forward fuselage skins provide aerodynamic contour and pressure containment in the pressure vessel of the fuselage.

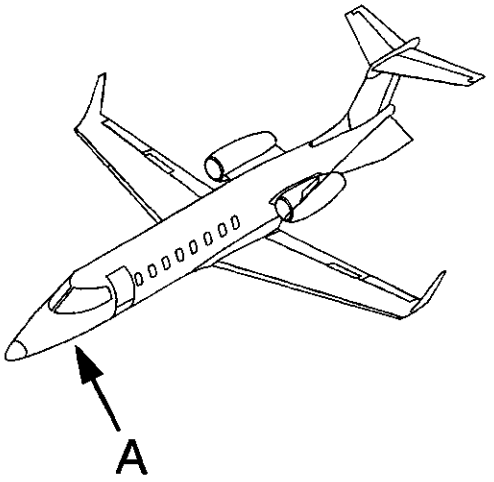

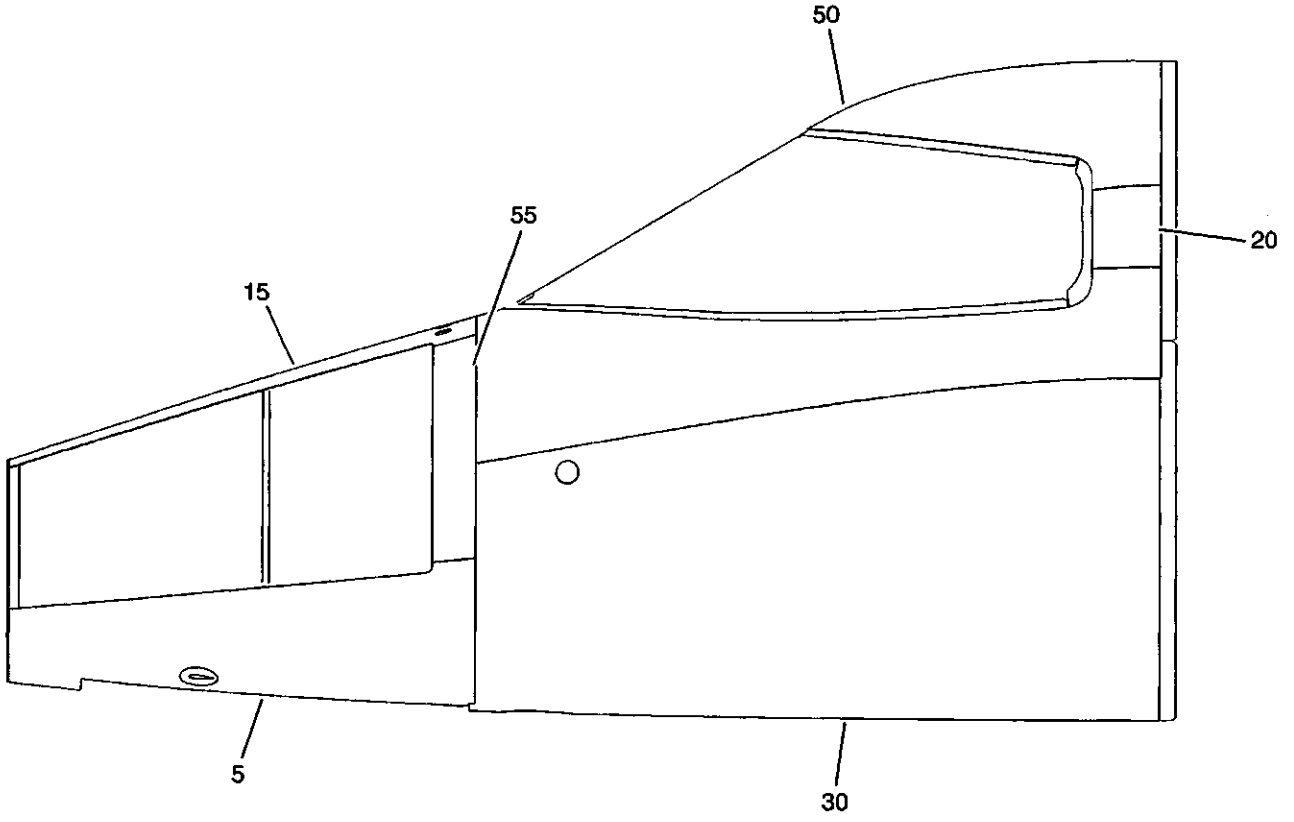

Detail A

S45-531015-001-01

Forward Fuselage Skins Repair Index
Figure 1

ITEM NO.	DWG. NO.	DESCRIPTION	EFF CODE	MATERIAL	GAGE	FINISH CODE	REPAIR FIG. NO.
		Forward Fuselage Skins	1				
-	4553001000	• Nose Extension Assy.	1	-	-	-	-
-	4553001001	• • Lower Panel Assy.	1	-	-	-	Replace
5	4553106000 [1]	• • • Skin Panel, Lower	1	2024T42 Clad	0.050	[1]	Replace
10	4553001001V3	• • • • Repair Plate	2	2024T3 Clad	0.100	[1]	Replace
-	4553001002	• • Panel Assy., Upper	1	-	-	-	Replace
15	4553106001	• • • Skin Panel, Upper	1	2024T42 Clad	0.080	[1]	Replace
-	4553002000	• • Flight Deck Assy.	1	-	-	-	-
20	4553206003	• • • Skin Panel, LH Flight Deck	1	2024T42 Clad	0.080	[1]	Replace
25	4553206013	• • • Skin Panel, RH Flight Deck	1	2024T42 Clad	0.080	[1]	Replace
-	4553002002	• • • Sub-Assy., Flight Deck	1	-	-	-	-
30	4553206016	• • • • Skin Panel, Bonded	1	-	-	-	Replace
-	4553206000	• • • • • Skin Panel, Lwr	1	2024T3 Clad	0.050	[2]	Replace
-	4553206006	• • • • • Doubler	1	2024T42 Clad	0.050	F0-10	Replace
-	4553206009	• • • • • Doubler, LH & RH	1	2024T42 Clad	0.040	[3]	Replace
-	4553002003	• • Panel Assy., Flight Deck Canopy	1	-	-	-	-
50	4553206002	• • • Canopy Skin	1	2024T42 Clad	0.100	[1]	Replace
55	4553106002	• • Skin Panel, LH & RH Forward Fuselage Assy.	1	2024T42 Clad	0.080	[1]	Replace
		- Not Illustrated					

EFFECTIVITY CODE	AIRCRAFT SERIAL NUMBERS
1	45-005 AND SUBSEQUENT
2	45-005 THRU 45-009

NOTES

[1] Finish internal surfaces F3-8, external surfaces F3

[2] Finish internal surfaces F3-7, external surfaces F3 prior to bonding

[3] Finish both surfaces F3-7 prior to bonding

Forward Fuselage Skins Repair Index
Table 1

FORWARD FUSELAGE SKINS - ALLOWABLE DAMAGE

1. Allowable Damage Limits

NOTE: All dimensions are in inches unless otherwise specified.

A. Fasteners
(1) Loose or failed rivets are not allowed. A loose or failed rivet can cause increased stress concentrations on the remaining rivets and lead to progressive joint failure. A careful inspection must be performed to ensure that joint failure has not spread from the area of the loose or failed rivet. (Refer to 51-40-05 for definition of rivet failure.)
(2) Loose or failed screws are not allowed. A loose or failed screw can cause increased stress concentrations on surrounding screws and lead to progressive joint failure. A careful inspection must be performed to ensure that the joint failure has not spread from the area of the loose or failed screw.

B. Cracks
(1) Cracks in any fitting or forging are not allowed. Cracked fittings or forgings must be replaced.
(2) Cracks in components other than fittings and forgings are considered allowable if properly repaired and refinished in accordance with 51-70-00.

C. Deformation
(1) Deformation of the forward fuselage skin structure is not allowed.

D. Corrosion (See Figure 101.)
(1) Corrosion damage is permissible if the affected area is properly repaired, refinished in accordance with 51-30-15 and these repairs do not reduce the original material thickness more than specified. (Refer to 51-70-00.)
(2) Structural components must be repaired or replaced if corrosion repair reduces the original material thickness more than specified.

E. Dents
(1) Dents are permissible if smooth and without abrupt changes in contour, do not exceed 0.045 inch (1.14 mm) in depth, do not exceed 10% of total surface area in one (1) square foot, and are not closer than 0.50 inch (12.7 mm) to any rivet or structural area.
(2) Dents are not allowed if sharp, a fracture of the skin has occurred greater than 0.100 inch (2.54 mm) in depth, exceeds 10% of the total surface area in one (1) square foot, and are closer than 0.50 inch (12.7 mm) to a rivet or structural area. Such dents shall be repaired or the component replaced.

F. Scratches (See Figure 101.)
(1) Scratches are permissible if the affected area is sanded smooth, refinished in accordance with 51-70-00, and the repairs do not reduce the original material thickness more than specified. (Refer to 51-30-15 for protective treatment procedures.)
(2) Structural components must be replaced or repaired if scratches reduce the original material thickness by more than specified.

G. Nicks (See Figure 101.)
   (1) Nicks are permissible if the affected area is sanded smooth, refinished in accordance with 51-70-00, and the repairs do not reduce the original material thickness more than specified. (Refer to 51-30-15 for protective treatment procedures.)
   (2) Structural components must be replaced or repaired if nicks reduce the original material thickness more than specified.

H. Fittings and Forgings
   (1) Fittings or forgings must be replaced if cracked or if fitting hole (non-bushed) tolerance exceeds the allowable limits. (Refer to 51-70-00.)
   (2) Fittings or forgings with bushing shall be repaired.

Nominal Thickness (Inch)	Minimum Thickness (Inch)
0.016	0.0135
0.020	0.0175
0.025	0.0225
0.032	0.0295
0.040	0.0370
0.050	0.0460
0.063	0.0590
0.071	0.0670
0.080	0.0760
0.100	0.0950
0.125	0.1200
0.190	0.1800
0.250	0.2370

Allowable Material Thickness
Figure 101

FORWARD FUSELAGE SKINS - REPAIR

1. Repairs

A. Refer to 51-70-00 for typical repairs and allowable wear and repair data.

CENTER FUSELAGE ASSEMBLY - STRUCTURAL IDENTIFICATION

1. Description (See Figure 1 and Table 1.)

A. The center fuselage assembly of the Learjet 45 consists of the structure assembly from FS 219.60 to FS 457.71. The structure consists of 20 major bulkhead/frame assemblies (including the aft pressure bulkhead), stringers, skins and minor structural subassemblies (including the wing support structure and the auxiliary pressure skin assembly).

B. The center fuselage assembly of the Learjet 40 consist of the structure assembly from FS 244.11 to FS 457.71. The structure consist of 18 major bulkhead/frame assemblies (including the aft pressure bulkhead), stringers, skins and minor structural subassemblies (including the wing support structure and the auxiliary pressure skin assembly).

C. The center fuselage assembly provides mounting provisions for various aircraft systems and passenger support equipment.

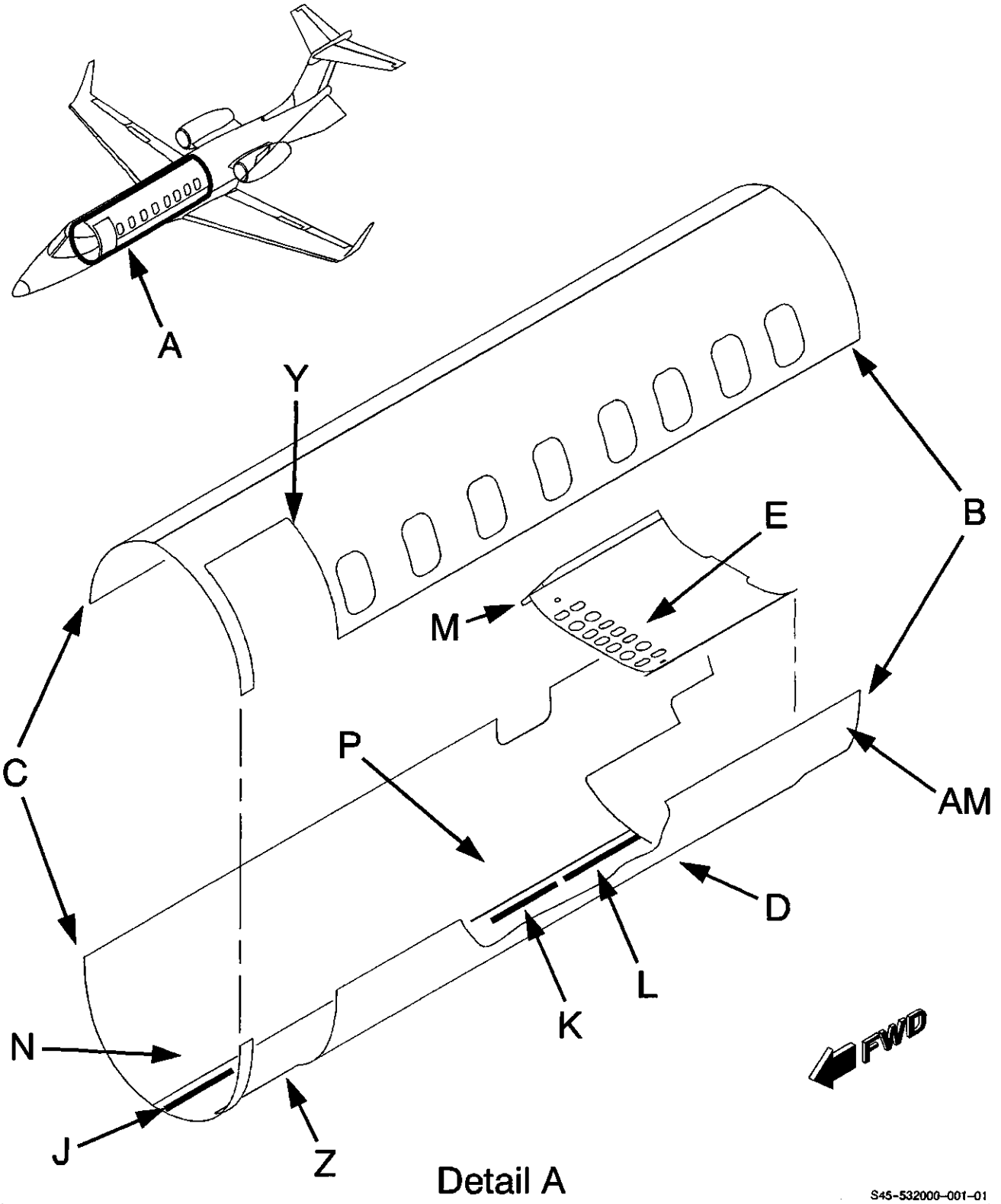

Center Fuselage Assembly Repair Index
Figure 1 (Sheet 1 of 19)

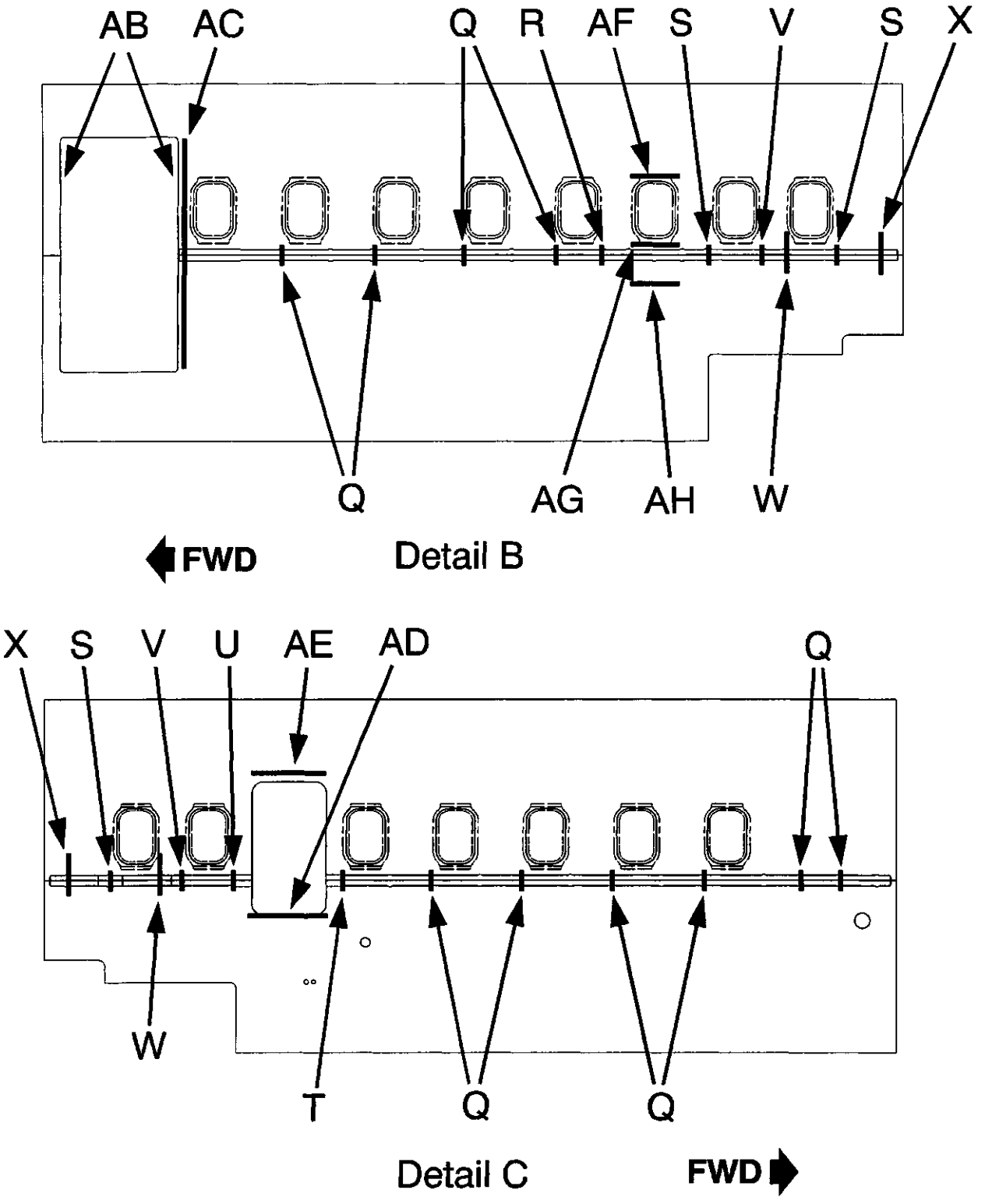

Center Fuselage Assembly Repair Index
Figure 1 (Sheet 2 of 19)

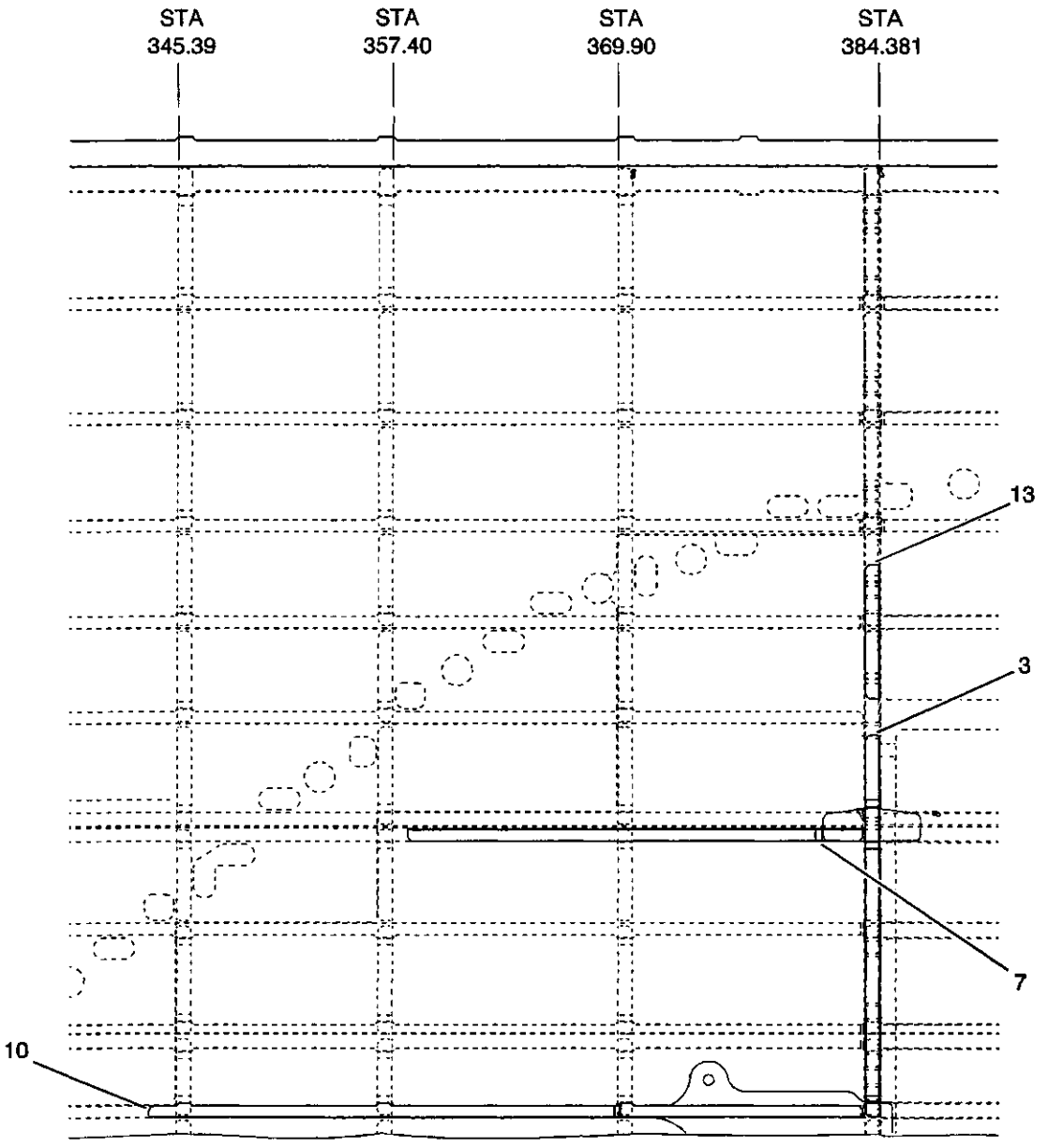

FWD

(VIEW LOOKING INBOARD)

Detail D

S45-532000-001-03

Center Fuselage Assembly Repair Index
Figure 1 (Sheet 3 of 19)

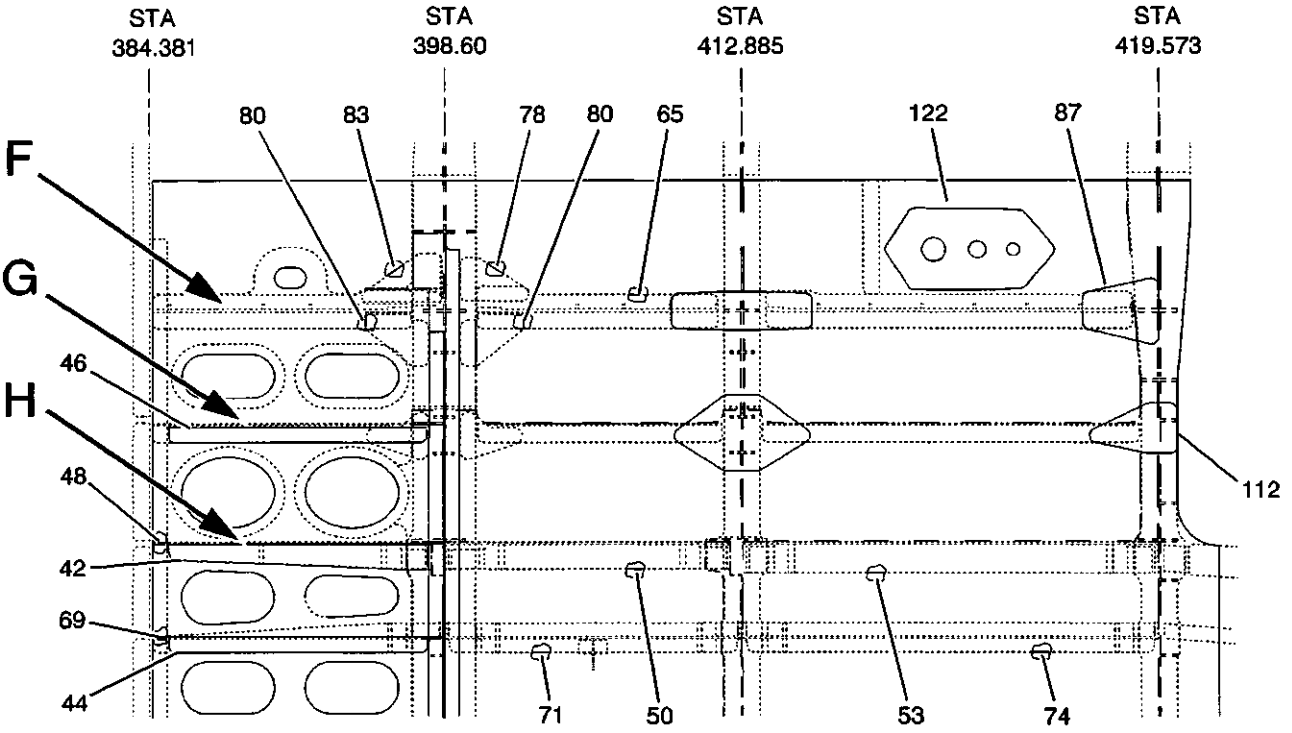

(VIEW LOOKING UP)

FWD

Detail E

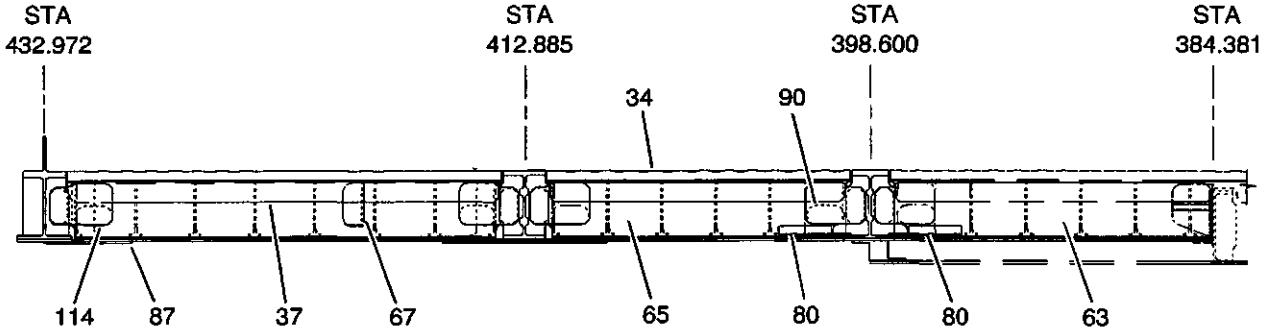

(VIEW LOOKING OUTBOARD, LH SIDE)

FWD

Detail F

S45-532000-001-04

Center Fuselage Assembly Repair Index
Figure 1 (Sheet 4 of 19)

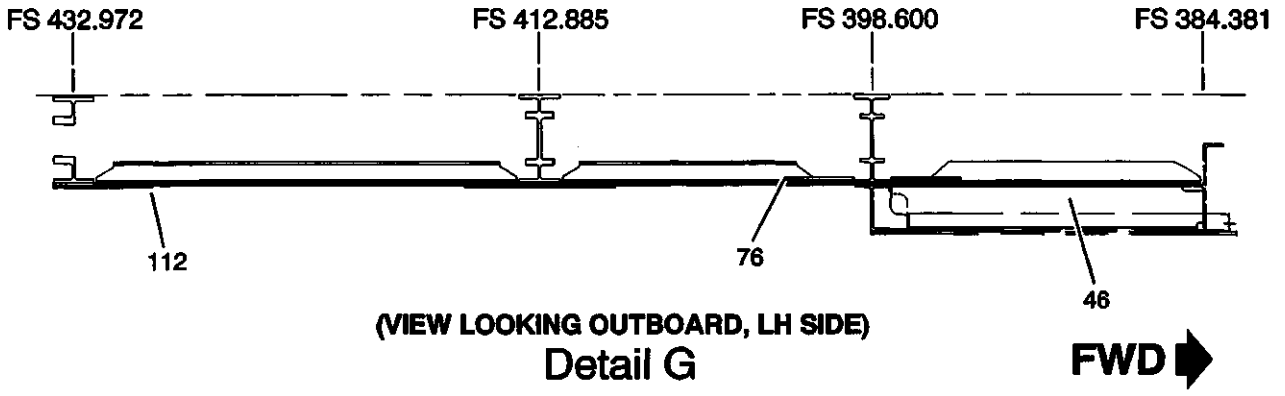

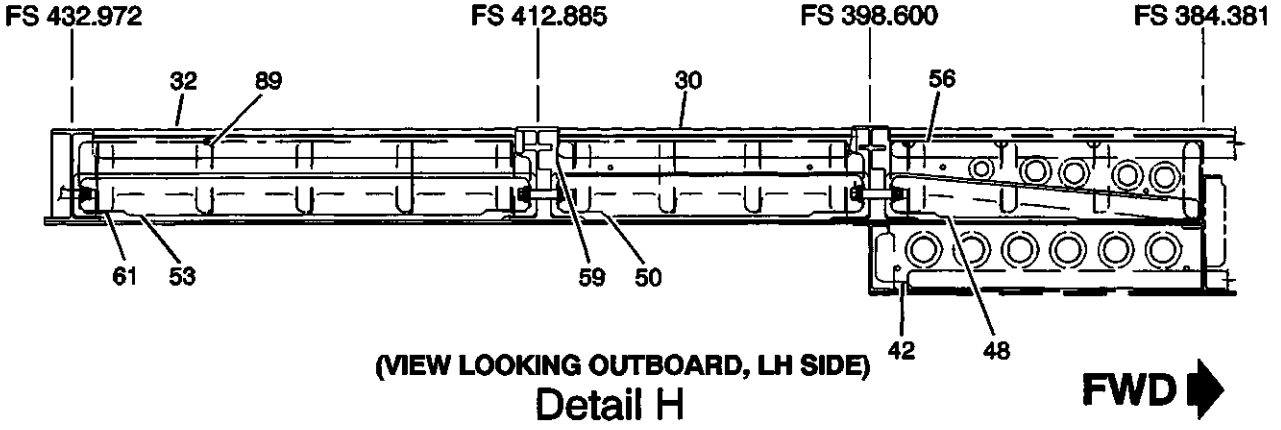

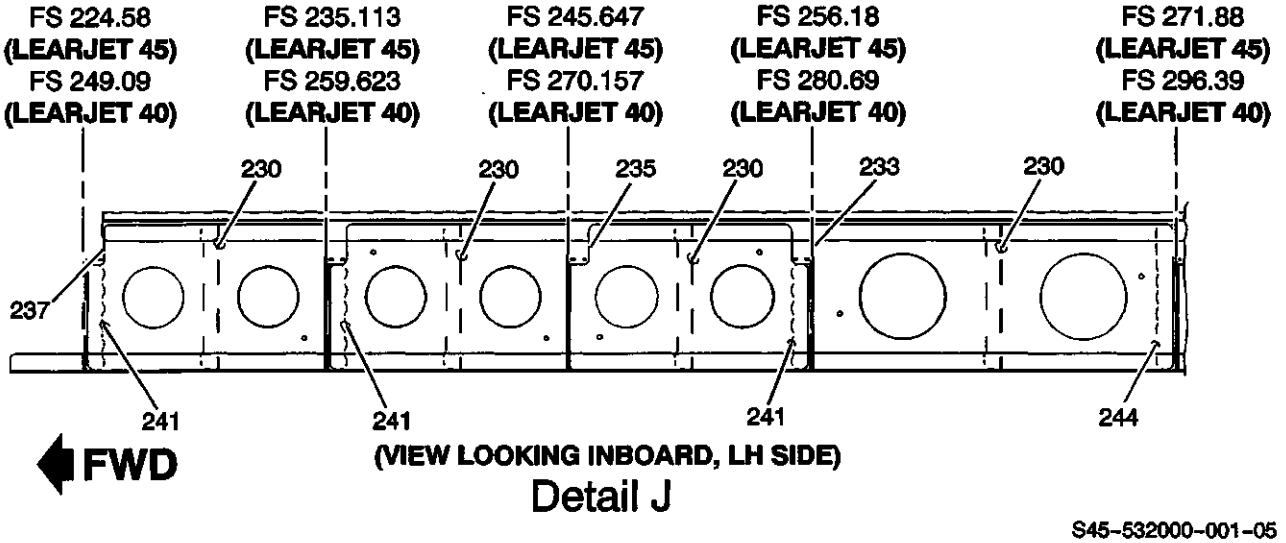

S45-532000-001-05

Center Fuselage Assembly Repair Index
Figure 1 (Sheet 5 of 19)

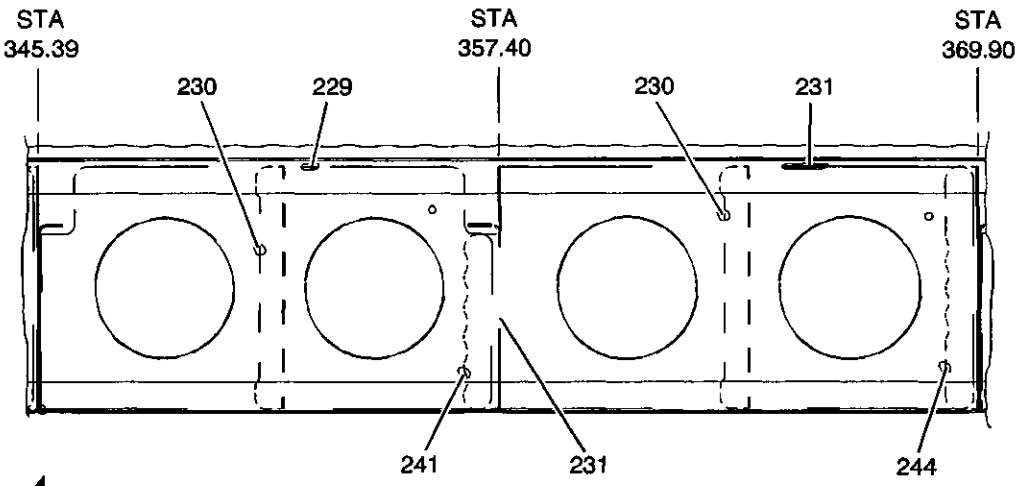

FWD

(VIEW LOOKING INBOARD)

Detail K

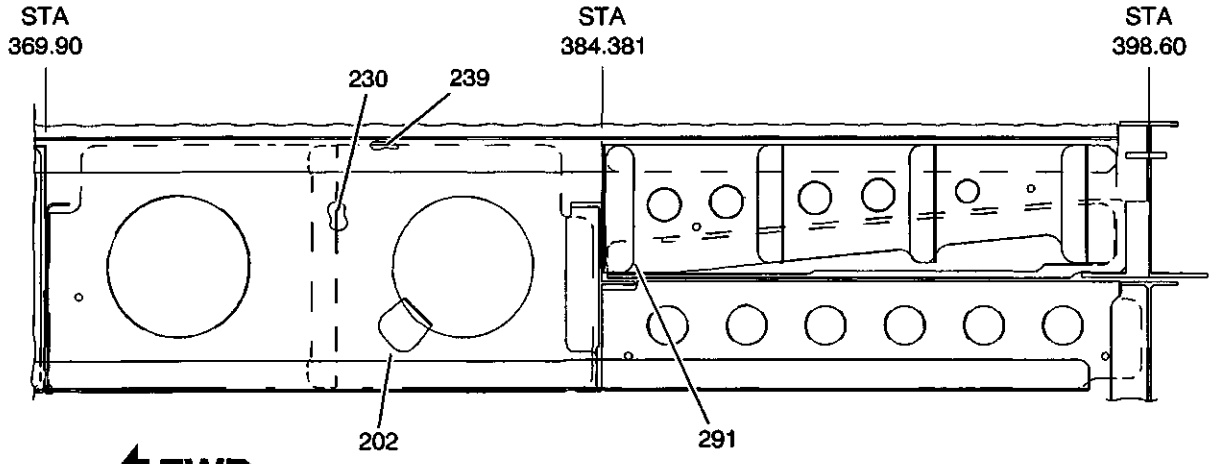

FWD

(VIEW LOOKING INBOARD)

Detail L

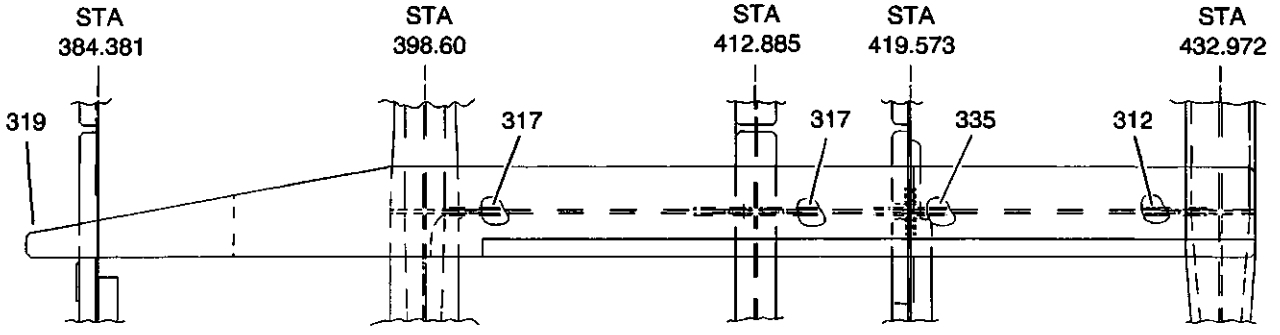

(VIEW LOOKING INBOARD)

FWD

Detail M

S45-532000-001-06

Center Fuselage Assembly Repair Index
Figure 1 (Sheet 6 of 19)

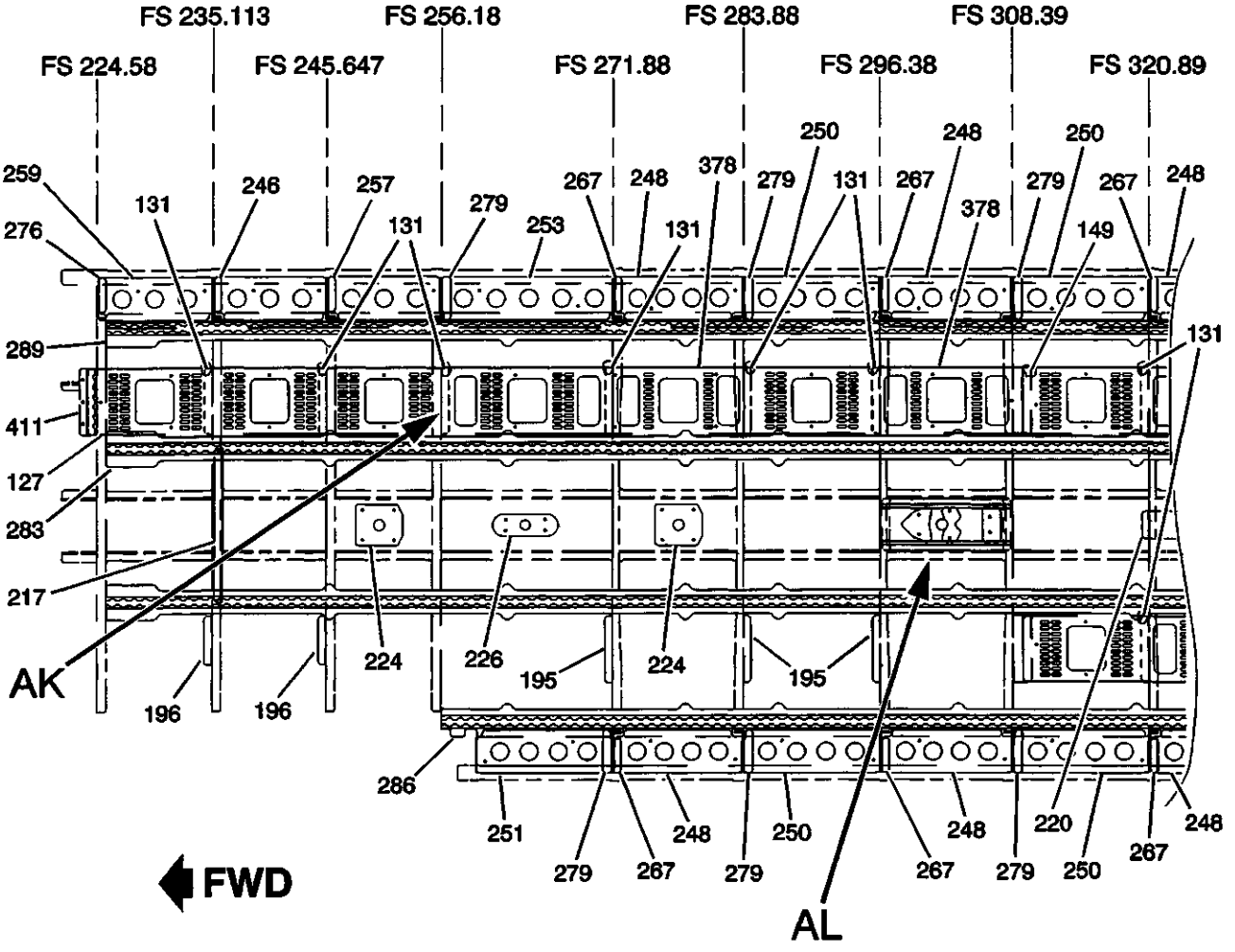

(VIEW LOOKING DOWN)
(LEARJET 45)

Detail N

S45-532000-001-07

Center Fuselage Assembly Repair Index
Figure 1 (Sheet 7 of 19)

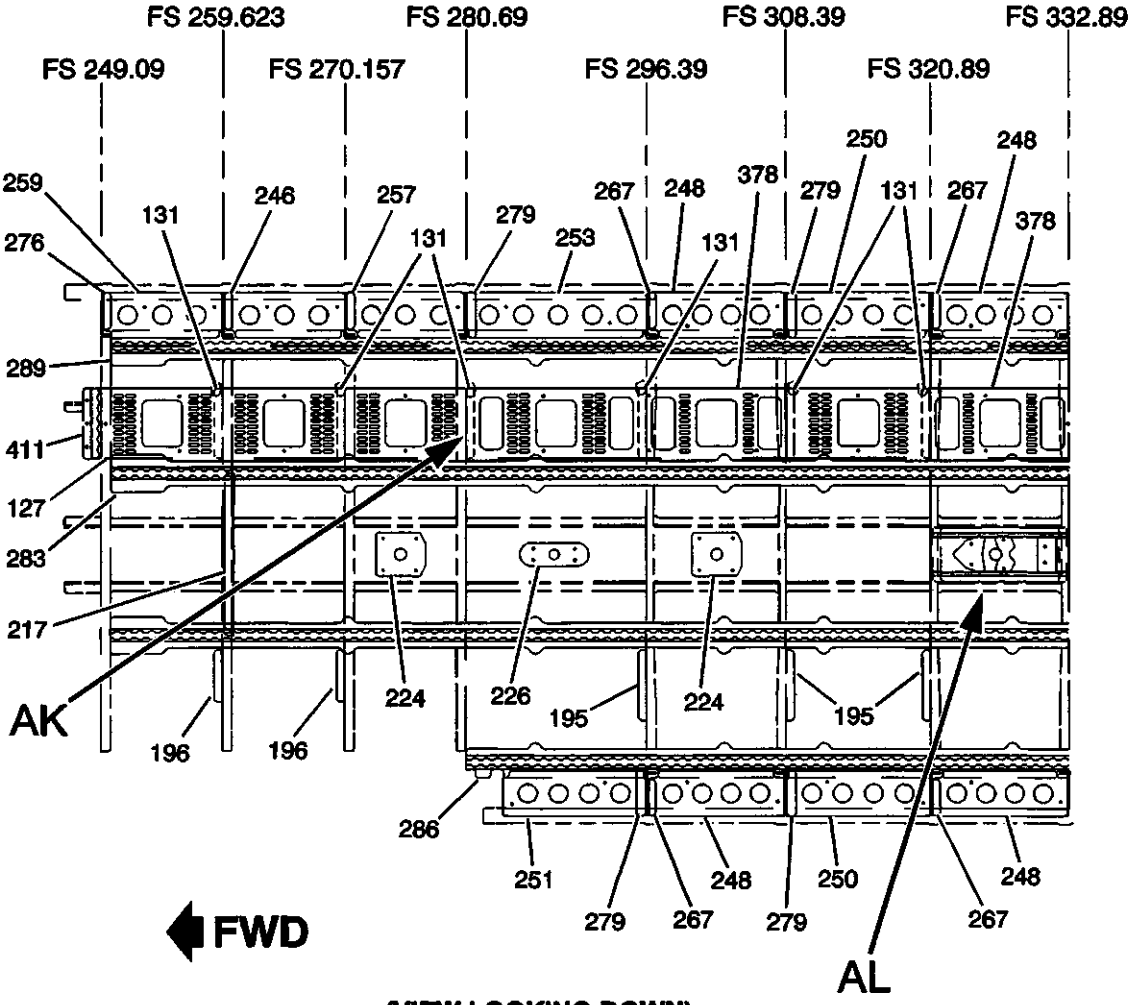

(VIEW LOOKING DOWN)
(LEARJET 40)

Detail N

S45-532000-001-19

Center Fuselage Assembly Repair Index
Figure 1 (Sheet 8 of 19)

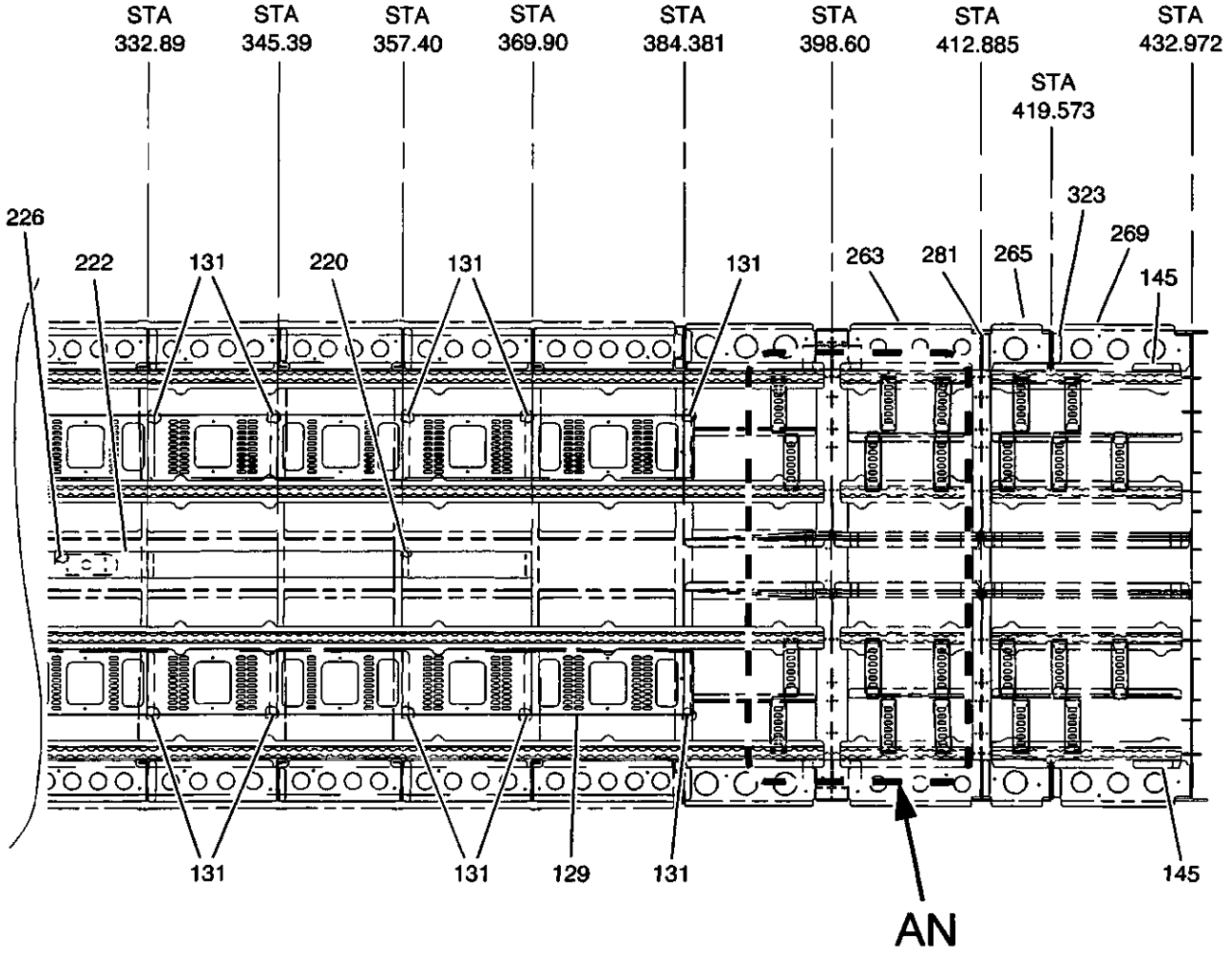

FWD

(VIEW LOOKING DOWN)

Detail P

S45-532000-001-08

Center Fuselage Assembly Repair Index
Figure 1 (Sheet 9 of 19)

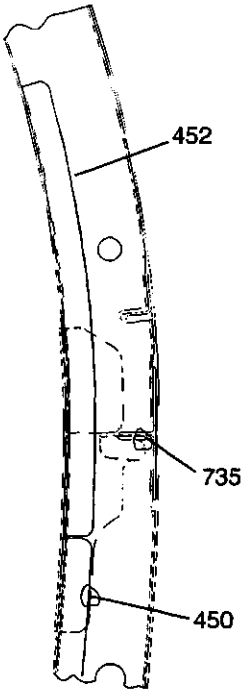

**(VIEW LOOKING AFT LH SIDE
STA 283.88, 308.39, 332.89, 357.401)
(VIEW LOOKING FWD RH SIDE
STA 235.113, 245.647, 271.88,
296.38, 320.89, 345.39)**

Detail Q

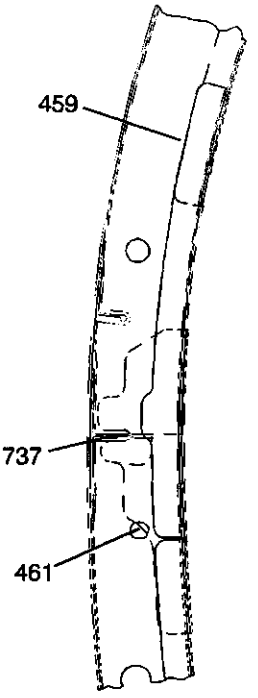

**(VIEW LOOKING FWD LH SIDE
STA 396.901)**

Detail R

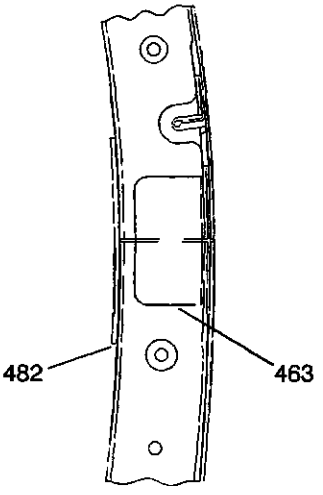

**(VIEW LOOKING AFT, LH SIDE SHOWN
STA 398.60, 432.972)
(RH SIDE OPPOSITE, STA 432.972)**

Detail S

S45-532000-001-09

Center Fuselage Assembly Repair Index
Figure 1 (Sheet 10 of 19)

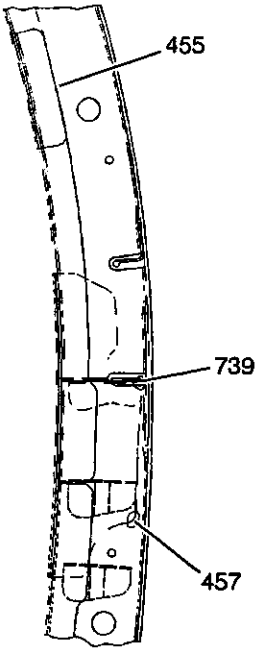

**(VIEW LOOKING FWD
STA 369.90, RH SIDE)**

Detail T

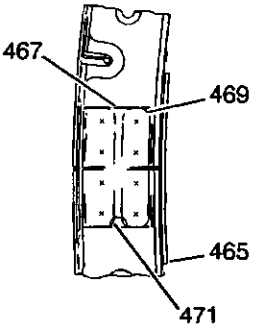

**(VIEW LOOKING AFT
STA 398.60, RH SIDE)**

Detail U

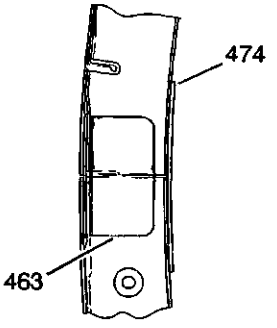

**(VIEW LOOKING FWD
STA 412.885, LH SHOWN;
RH OPPOSITE)**

Detail V

S45-532000-001-10

Center Fuselage Assembly Repair Index
Figure 1 (Sheet 11 of 19)

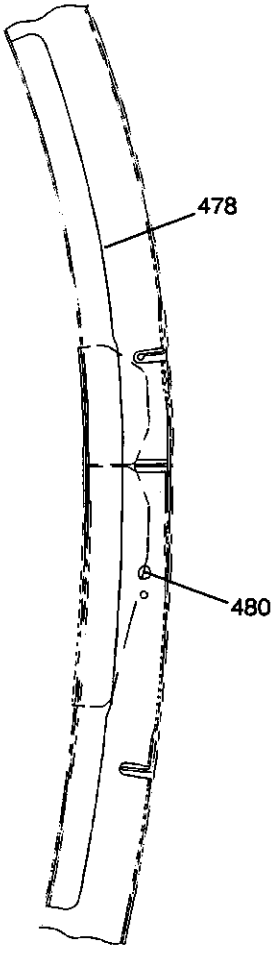

FS 419.57
(LH SHOWN; RH OPPOSITE)

Detail W

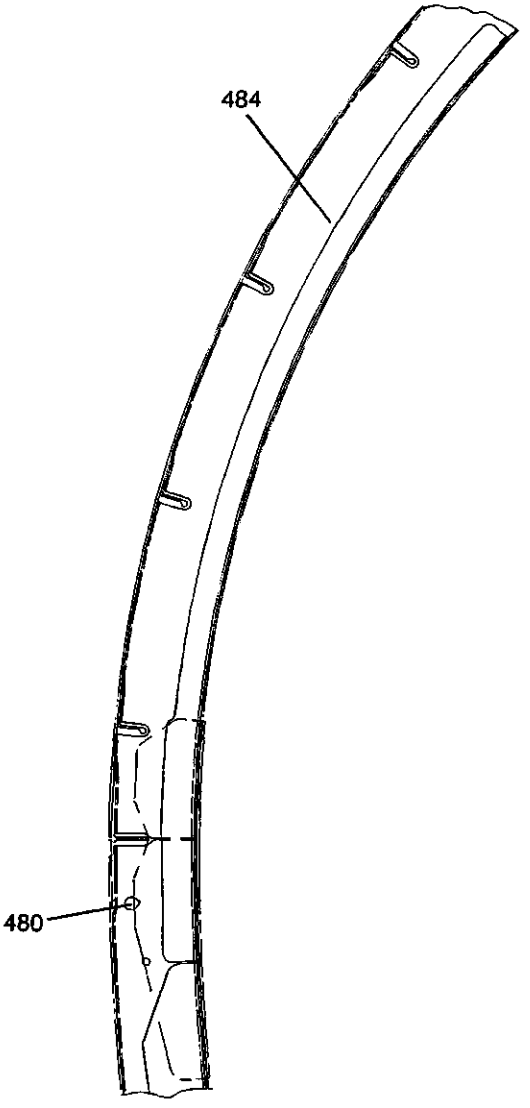

FS 444.48
(LH SHOWN; RH OPPOSITE)

Detail X

S45-532000-001-11

Center Fuselage Assembly Repair Index
Figure 1 (Sheet 12 of 19)

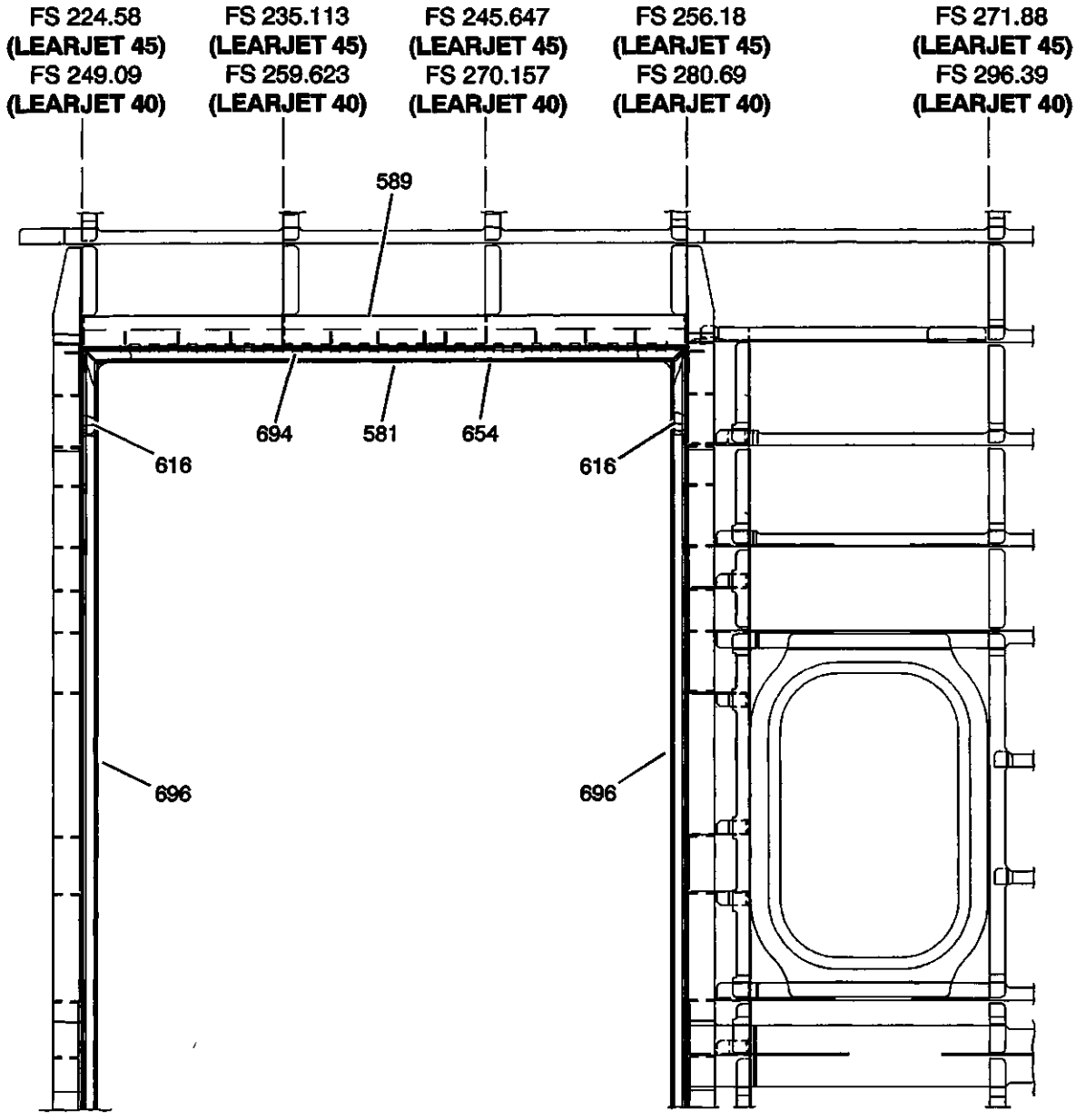

FWD

(VIEW LOOKING INBOARD)
Detail Y

S45-532000-001-12

Center Fuselage Assembly Repair Index
Figure 1 (Sheet 13 of 19)

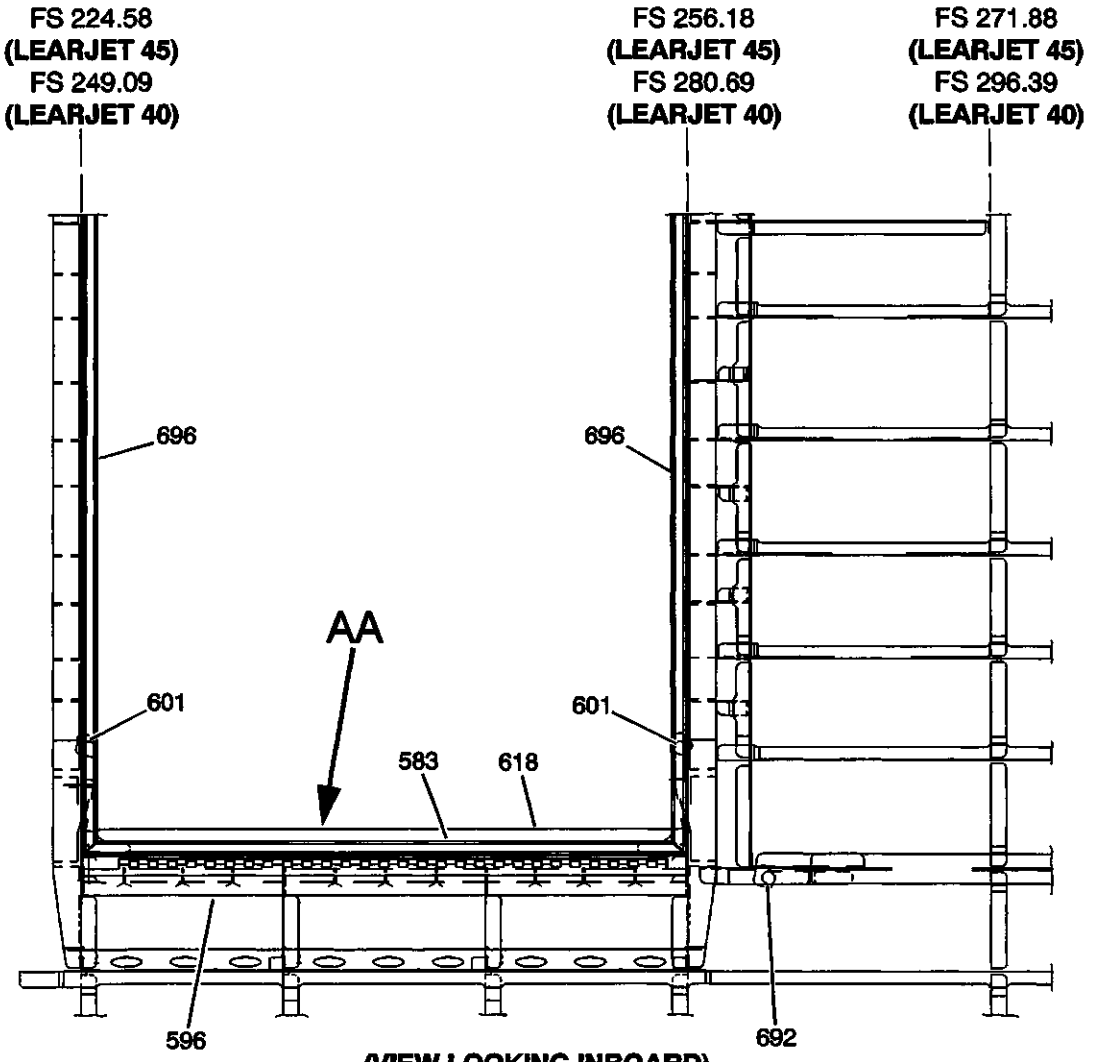

(VIEW LOOKING INBOARD)

Detail Z

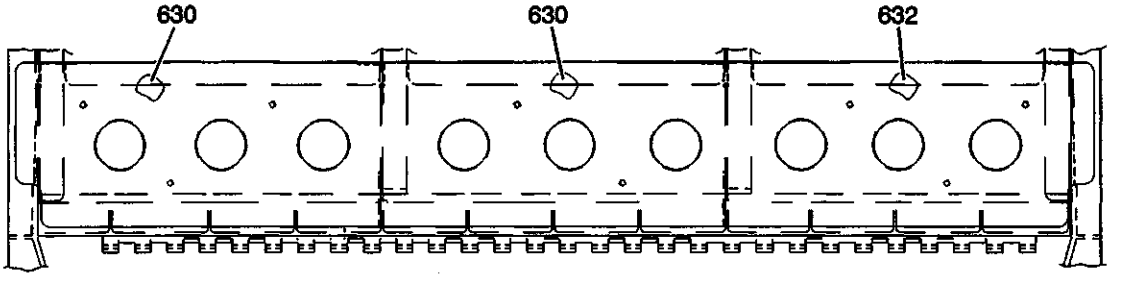

(VIEW LOOKING DOWN)

Detail AA

S45-532000-001-13

Center Fuselage Assembly Repair Index
Figure 1 (Sheet 14 of 19)

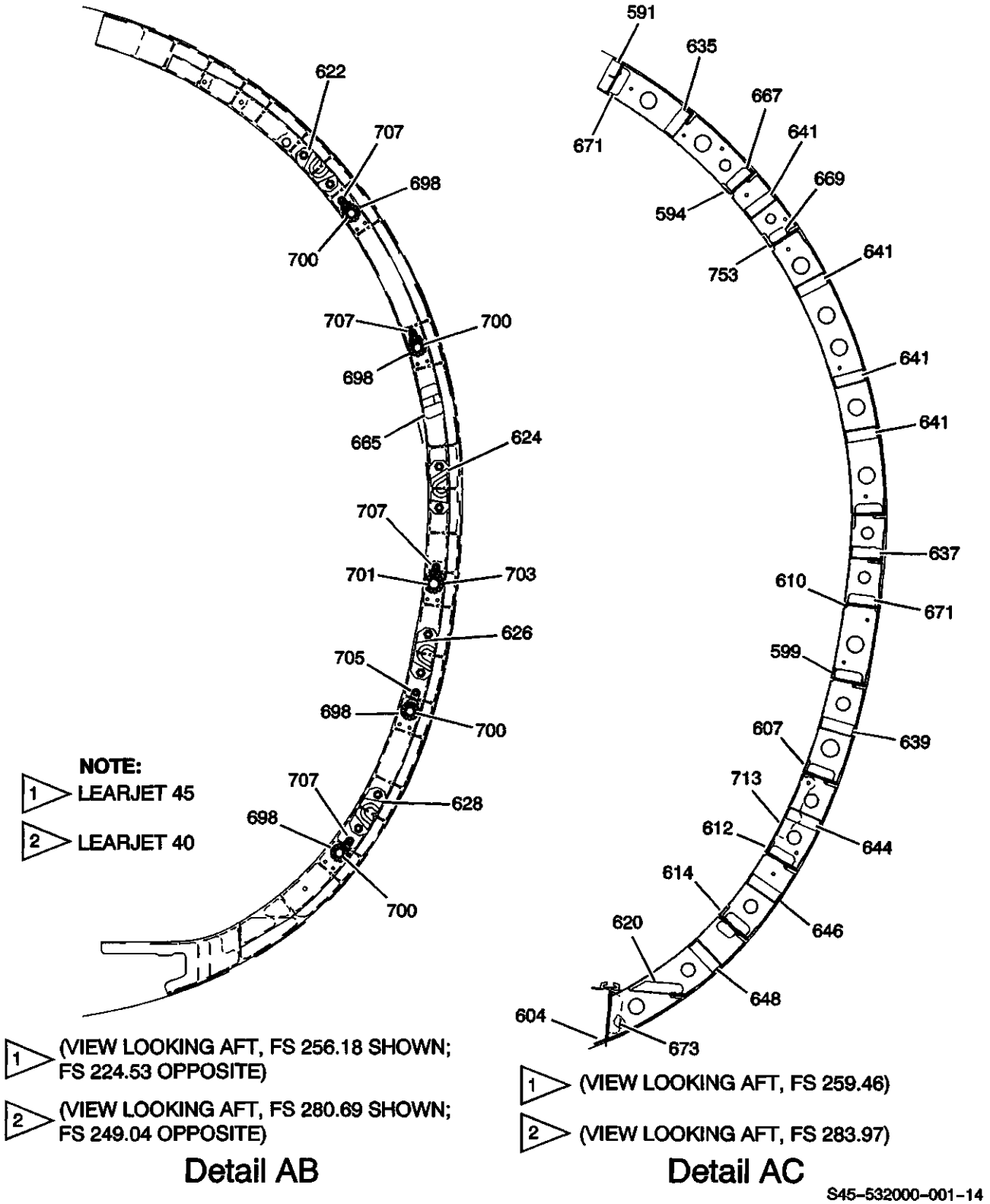

Center Fuselage Assembly Repair Index
Figure 1 (Sheet 15 of 19)

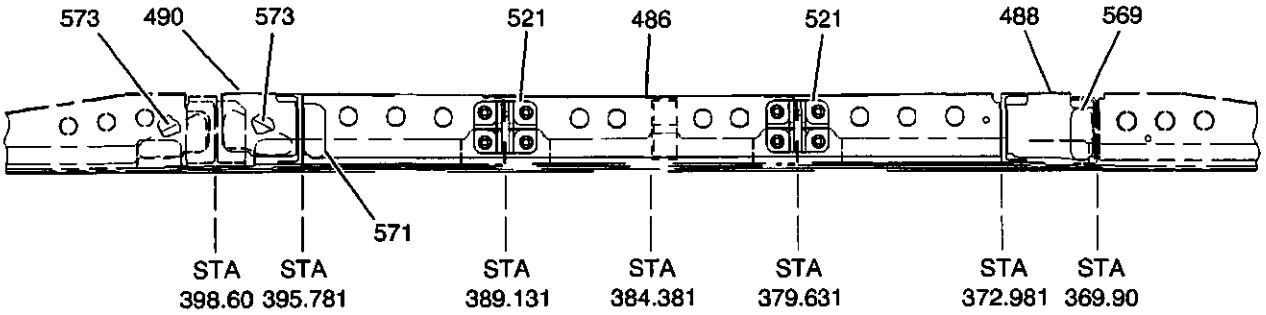

(VIEW LOOKING DOWN)

Detail AD

FWD

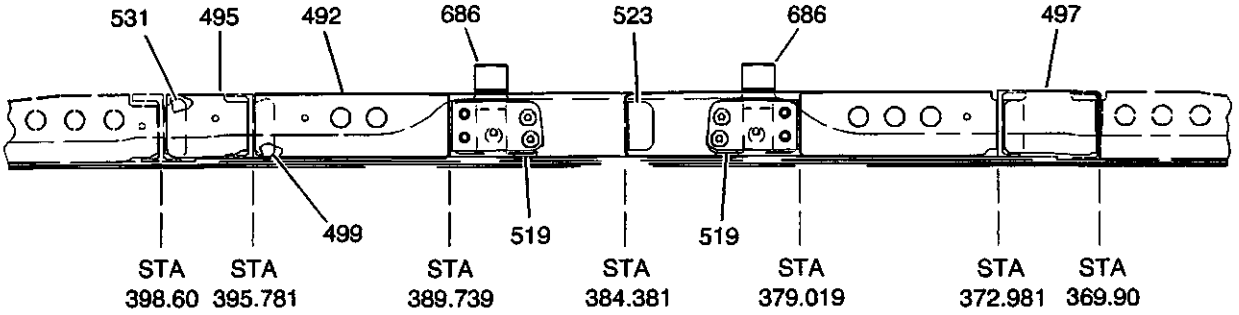

(VIEW LOOKING DOWN)

Detail AE

FWD

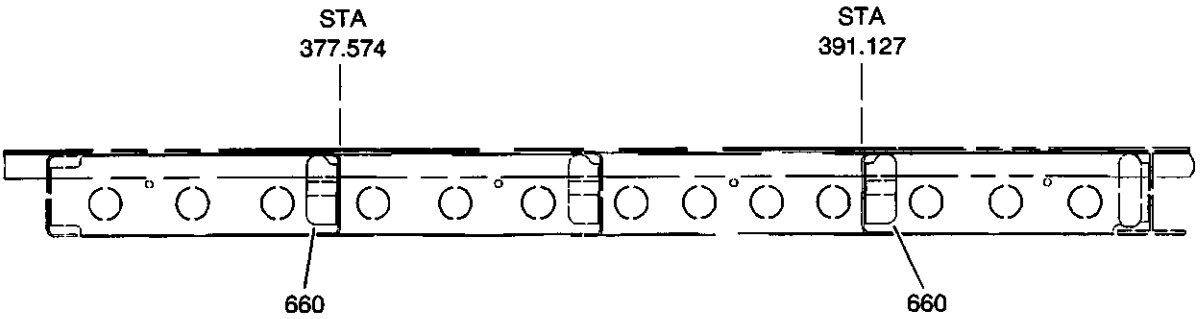

(VIEW LOOKING UP)

FWD

Detail AF

S45-532000-001-15

Center Fuselage Assembly Repair Index
Figure 1 (Sheet 16 of 19)

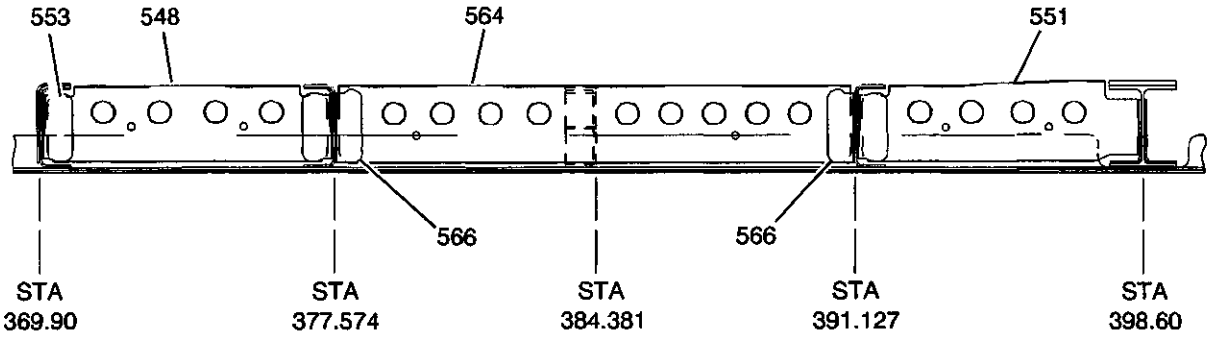

FWD

(VIEW LOOKING DOWN)

Detail AG

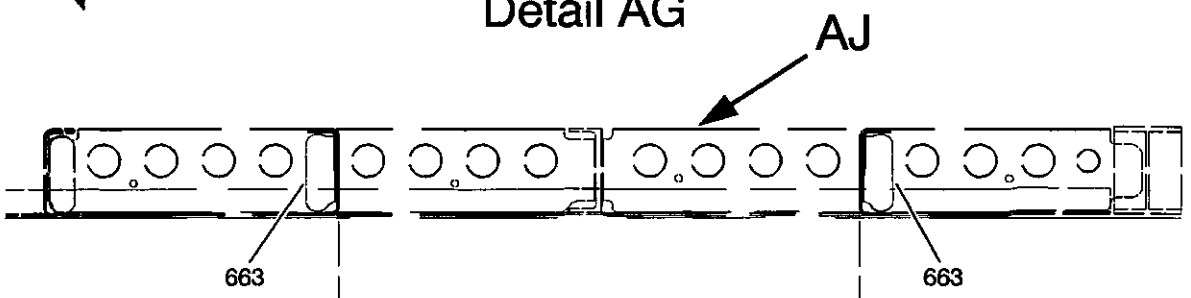

FWD

STA 377.574

(VIEW LOOKING DOWN)

STA 391.127

Detail AH

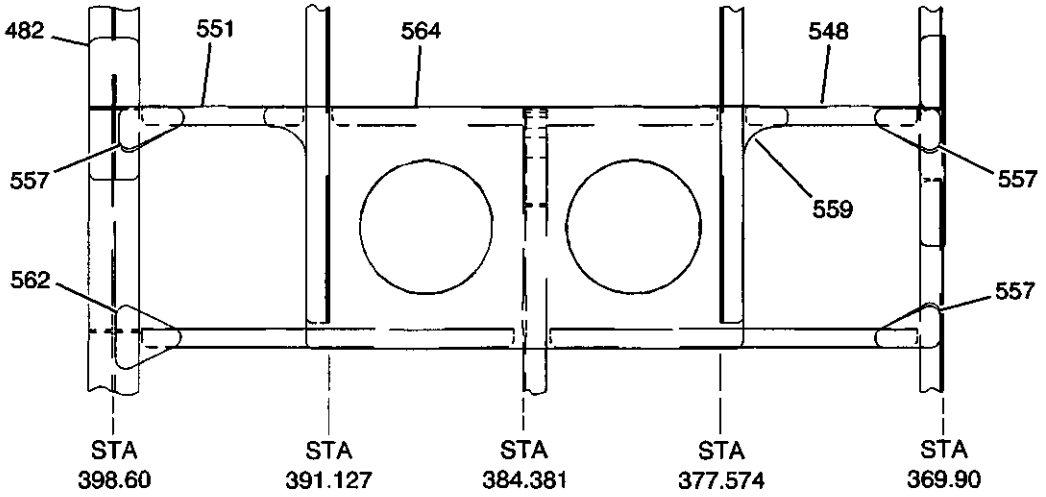

(VIEW LOOKING OUTBOARD)

Detail AJ

FWD

S45-532000-001-16

Center Fuselage Assembly Repair Index
Figure 1 (Sheet 17 of 19)

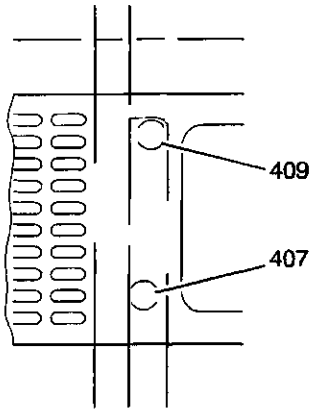

Detail AK

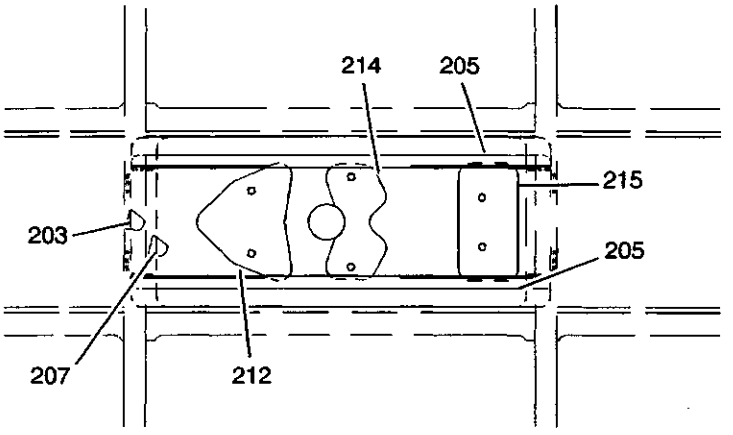

Detail AL

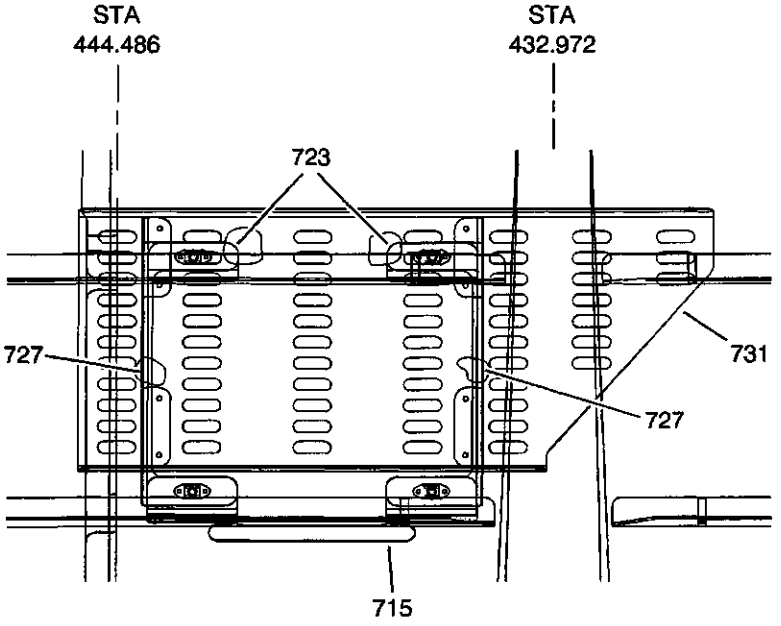

(VIEW LOOKING OUTBOARD)

Detail AM

S45-532000-001-17

Center Fuselage Assembly Repair Index
Figure 1 (Sheet 18 of 19)

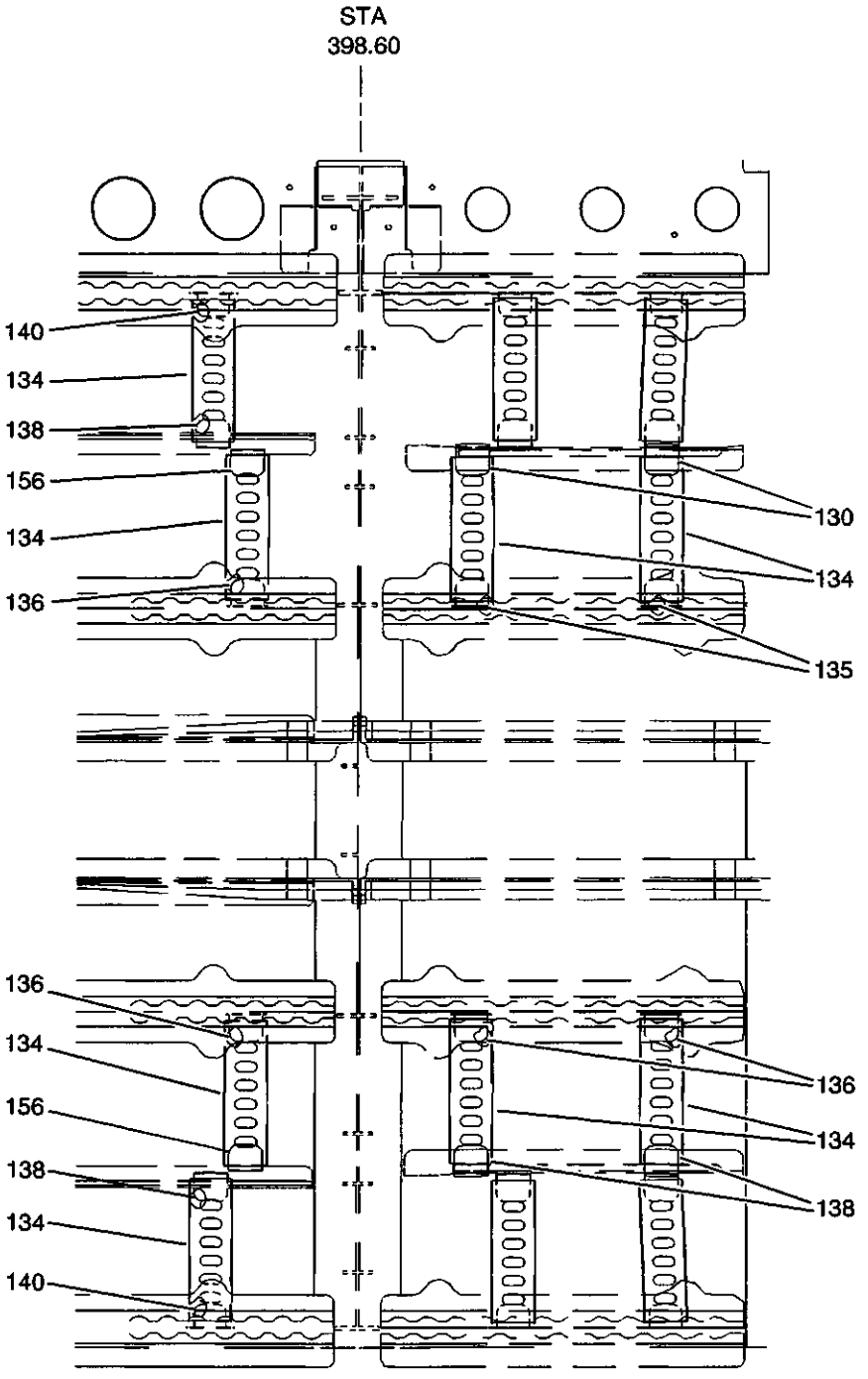

Detail AN

S45-532000-001-18

Center Fuselage Assembly Repair Index
Figure 1 (Sheet 19 of 19)

ITEM NO.	DWG. NO.	DESCRIPTION	EFF CODE	MATERIAL	GAGE	FINISH CODE	REPAIR FIG. NO.
		Center Fuselage Assy.					
	4553003008	Center Fuselage Upper/Lower Panel Assy.	1	-	-	-	-
		• Refer to 53-20-10 for Center Fuselage Frames					
		• Refer to 53-20-20 for Center Fuselage Stringers					
		• Refer to 53-20-40 for Center Fuselage Skins					
-	4553003000	• Lower Panel Assy.	1	-	-	-	-
-	4553003001	• • Lower Panel Assy.	1	-	-	-	-
3	4553308105	• • • Attach Angle, Fairing	1	2024-T42 Clad	0.040	F3-8	Replace
7	4553308106	• • • Attach Angle, Fairing	1	2024-T42 Clad	0.040	F3-8	Replace
10	4553308107	• • • Attach Angle, Fairing	1	2024-T42 Clad	0.040	F3-8	Replace
13	4553308108	• • • Attach Angle, Fairing	1	2024-T42 Clad	0.040	F3-8	Replace
-	4557106162	• • • Angle, Fairing	1	2024-T42 Clad	0.040	F3-8	Replace
-	4557106163	• • • Angle, Fairing	1	2024-T42 Clad	0.040	F3-8	Replace
-	4557106164	• • • Angle, Fairing	1	2024-T42 Clad	0.040	F3-8	Replace
-	4553003002	• • Skin Assy, LH & RH Auxiliary Pressure	1	-	-	-	-
-	4553308039	• • • Angle, LH & RH FS 398.60	1	2024-T42 Clad	0.050	F3-8	Replace
30	4553308061 [4]	• • • Seat Rail, LH & RH FS 398.60 to 412.92	1	7075-T73511	[1]	[2]	Replace
32	4553308062 [4]	• • • Seat Rail, LH & RH FS 412.92 to 432.97	1	7075-T73511	[1]	[2]	Replace
34	4553308065 [4]	• • • Seat Rail, LH & RH FS 398.60 to 412.88	1	7150-T77511	[3]	[2]	Replace
37	4553308066 [4]	• • • Seat Rail, LH & RH FS 412.88 to 432.97	1	7150-T77511	[3]	[2]	Replace
-	4553003002 V1	• • • • Spigot	2	2024-T3 Clad	0.060	F3-8	Replace
-	4553003002 V1	• • • • Repair Strap	2	2024-T3 Clad	0.050	F3-8	Replace
42	4553308070	• • • Intercostal, LH & RH FS 384.38 to 398.60	1	2024-T42 Clad	0.040	F3-8	Replace
		- Not Illustrated					

Center Fuselage Assembly Repair Index
Table 1 (Sheet 1 of 14)

ITEM NO.	DWG. NO.	DESCRIPTION	EFF CODE	MATERIAL	GAGE	FINISH CODE	REPAIR FIG. NO.
44	4553308071	• • • Intercostal, LH & RH FS384.38 to 398.60	1	2024-T42 Clad	0.040	F3-8	Replace
46	4553308072	• • • Intercostal, LH & RH FS 384.38 to 398.60	1	2024-T42 Clad	0.040	F3-8	Replace
48	4553308073	• • • Longeron, LH & RH FS 384.38 to 398.60	1	7475T7351	1.300	F3-8	Replace
50	4553308074	• • • Longeron, LH & RH FS 389.60 to 412.92	1	7475T7351	1.300	F3-8	Replace
53	4553308075	• • • Longeron, LH & RH FS 412.92 to 432.97	1	7475T7351	1.500	F3-8	Replace
56	4553308076	• • • Shear Web, LH & RH FS 384.38 to 398.60	1	2024-T42 Clad	0.032	F3-8	Replace
59	4553308077	• • • Shear Web, LH & RH FS398.60 to 412.92	1	2024-T42 Clad	0.032	F3-8	Replace
61	4553308078	• • • Shear Web BL, LH & RH FS 412.92 to 432.97	1	2024-T42 Clad	0.032	F3-8	Replace
63	4553308079	• • • Longeron, LH & RH FS 384.38 to 398.60	1	7475T7351	1.577	F3-8	Replace
65	4553308080	• • • Longeron, LH & RH FS 398.60 to 412.92	1	7475T7351		F3-8	Replace
67	4553308081	• • • Longeron, LH & RH FS 412.92 to 432.97	1	7475T7351	1.734	F3-8	Replace
69	4553308082	• • • Longeron, LH & RH FS 384.38 to 398.60	1	7475T7351	1.400	F3-8	Replace
71	4553308083	• • • Longeron, LH & RH	1	7475T7351	2.250	F3-8	Replace
74	4553308084	• • • Longeron, LH & RH FS 412.92 to 432.97	1	7475T7351	1.3000	F3-8	Replace
76	4553308085	• • • Gusset Plate (4 ea.)	1	2024-T3 Clad	0.1000	F3-8	Replace
78	4553308088	• • • Joint Strap, LH & RH	1	2024-T42 Clad	0.080	F3-8	Replace
80	4553308089	• • • Gusset, LH & RH FS 398.60	1	2024-T42 Clad	0.080	F3-8	Replace
83	4553308090	• • • Gusset, LH & RH FS 398.60	1	7075T7351		F3-8	Replace
85	4553308092	• • • Joint Strap, LH & RH FS 12.92	1	2024-T42 Clad	0.080	F3-8	Replace
87	4553308094	• • • Joint Strap, LH & RH BL 18	1	2024-T42 Clad	0.080	F3-8	Replace
89	4553308098	• • • Angle (24 ea.)	1	2024-T3 Clad	0.032	F3-8	Replace
		- Not Illustrated					

Center Fuselage Assembly Repair Index
Table 1 (Sheet 2 of 14)

ITEM NO.	DWG. NO.	DESCRIPTION	EFF CODE	MATERIAL	GAGE	FINISH CODE	REPAIR FIG. NO.
90	4553308292	• • • Plate FS 398.60 to 412.92 (6 ea.)	1	2024-T3 Clad	0.063	F3-8	Replace
-	4553308426	• • • Shim, Laminated (2 ea.)	1	5	0.020	F3-8	Replace
-	4553308427	• • • Shim, Laminated (2 ea.)	1	5	0.020	F3-8	Replace
-	4553308428	• • • Shim, Laminated (4 ea.)	1	5	0.020	F3-8	Replace
-	4553308429	• • • Shim, Laminated (8 ea.)	1	2024-T3 Clad	0.050	F3-8	Replace
-	4553308430	• • • Shim, Laminated (8 ea.)	1	5	0.032	F3-8	Replace
-	4553308431	• • • Shim, Laminated (2 ea.)	1	5	0.063	F3-8	Replace
-	4553308433	• • • Shim, Laminated (2 ea.)	1	5	0.040	F3-8	Replace
-	4553308434	• • • Shim, Laminated (2 ea.)	1	5	0.040	F3-8	Replace
-	4553308435	• • • Shim, Laminated (4 ea.)	1	5	0.032	F3-8	Replace
-	4553308436	• • • Shim, Laminated (4 ea.)	1	5	0.032	F3-8	Replace
112	4553308439	• • • Plate (2 ea.)	1	2024-T3 Clad	0.100	F3-8	Replace
114	4553308440	• • • Plate (2 ea.)	1	2024-T3 Clad	0.063	F3-8	Replace
-	4553308441	• • • Shim, Laminated (4 ea.)	1	5	0.032	F3-8	Replace
-	4553308442	• • • Shim, Laminated (6 ea.)	1	5	0.032	F3-8	Replace
-	4553308444	• • • Shim, Laminated (6 ea.)	1	5	0.032	F3-8	Replace
-	4553308445	• • • Shim, Laminated (4 ea.)	1	5	0.032	F3-8	Replace
122	4553308509	• • • Doubler					
	4553003002 V10 6	• • • Doubler	1	2024-T3 Clad	0.100	F3-8	Replace
-	4532302094	• • • Fitting, Cabin Penetration	3	7075T7351	1.000	F3-8	Replace
127	4520008102	• • Cable Tray, RH Center	1	2024-T3 Clad	0.020	F3-8	Replace
129	4520008103	• • Cable Tray	1	2024-T3 Clad	0.020	F3-8	Replace
131	4520008105	• • Support Angle, Cable Tray	1	2024-T3 Clad	0.032	F3-8	Replace
134	4520008114	• • Channel	1	2024-T3 Clad	0.032	F3-8	Replace
136	4520008115	• • Support Angle, Electrical Cable	1	2024-T3 Clad	0.032	F3-8	Replace
138	4520008116	• • Support Angle, Electrical Cable	1	2024-T3 Clad	0.032	F3-8	Replace
140	4520008118	• • Support Angle, Electrical Cable	1	2024-T3 Clad	0.032	F3-8	Replace
-	4520008119 7	• • Cable Tray, Mid Spar	1	2024-T3 Clad	0.032	F4-10	Replace
		- Not Illustrated					

Center Fuselage Assembly Repair Index
Table 1 (Sheet 3 of 14)

ITEM NO.	DWG. NO.	DESCRIPTION	EFF CODE	MATERIAL	GAGE	FINISH CODE	REPAIR FIG. NO.
145	4520008120▷7	• • Support Bracket, Cable Tray	1	2024-T3 Clad	0.050	F3-8	Replace
-	4520008123	• • Doubler (4 ea.)	1	2024-T3 Clad	0.063	F3-8	Replace
149	4520008131	• • Support Angle, Cable Tray	1	2024-T3 Clad	0.032	F3-8	Replace
-	4520008138▷7	• • Support Bracket, Cable Tray	1	2024-T3 Clad	0.050	F3-8	Replace
-	4520008140	• • Bracket, Cable Support	1	2024-T3 Clad	0.040	F3-8	Replace
156	4520008172	• • Angle (2 ea.)	1	2024-T3 Clad	0.032	F3-8	Replace
-	4520008178	• • Clipping, Bracketry & Cable Installation	1	-	-	-	-
-	4520008147	• • • Mounting Bracket, LH & RH	1	2024-T3 Clad	0.050	F3-8	Replace
-	4520008091	• • • Mounting Bracket (14 ea.)	1	2024-T3 Clad	0.032	F3-8	Replace
-	4520008135	• • • Mounting Bracket	1	2024-T3 Clad	0.040	F3-8	Replace
-	4520008140	• • • Mounting Bracket. (4 ea.)	1	2024-T3 Clad	0.040	F3-8	Replace
-	4520008166	• • • Bracket, Ground Plug (7 ea.)	1	2024-T3 Clad	0.040	F3-8	Replace
-	4520008168	• • • Bracket (2 ea.)	1	2024-T42 Clad	0.040	F3-8	Replace
-	4520008241	• • • Mounting Bracket (9 ea.)	1	2024-T3 Clad	0.032	F3-8	Replace
-	4520008338	• • • Bracket, Plug Break (2 ea.)	1	2024-T42 Clad	0.040	F3-8	Replace
-	4520008369	• • • Bracket (2 ea.)	1	2024-T3 Clad	0.032	F5-10	Replace
-	4520008370	• • • Bracket (2 ea.)	1	2024-T3 Clad	0.032	F3-8	Replace
-	4520008374	• • • Mounting Bracket, LH & RH	1	2024-T3 Clad	0.040	F5-10	Replace
-	4520008375	• • • Mounting Bracket	1	2024-T3 Clad	0.040	F3-8	Replace
-	4520008371	• • • Support Bracket, Outbd. (4 ea.)	1	2024-T3 Clad	0.032	F3-8	Replace
-	4520008372	• • • Support Bracket, Inbd. (4 ea.)	1	2024-T3 Clad	0.032	F3-8	Replace
-	4520008373	• • • Mounting Bracket (4 ea.)	1	2024-T3 Clad	0.032	F3-8	Replace
-	4520008025	• • • Mounting Bracket (2 ea.)	1	2024-T3 Clad	0.050	F3-8	Replace
-	4520008124	• • • Mounting Bracket	1	2024-T3 Clad	0.032	F3-8	Replace
-	MS3340-1-9	• • • Bracket (4 ea.)	1	▷6			
195	4520008179	• • Support Angle, Cable Tray (2 ea.)	1	2024-T3 Clad	0.032	F3-8	Replace
196	4520008182	• • Support Angle, Cable Tray (2 ea.)	1	2024-T3 Clad	0.032	F3-8	Replace
-	4520008188▷9	• • Support Bracket, Cable Tray	1	2024-T3 Clad	0.032	F3-8	Replace
		- Not Illustrated					

Center Fuselage Assembly Repair Index
Table 1 (Sheet 4 of 14)

ITEM NO.	DWG. NO.	DESCRIPTION	EFF CODE	MATERIAL	GAGE	FINISH CODE	REPAIR FIG. NO.
200	4521202057	• • Support Bracket, ECS (6 ea.)	1	2024-T42 Clad	0.032	F3-8	Replace
202	4521302020	• • Support Bracket, CPCS	1	2024-T3 Clad	0.040	F3-8	Replace
203	4523108101	• • Doubler, VHF 1 Antenna	1	2024-T3 Clad	0.050	F3-8	Replace
205	4523108102	• • Support Angle, VHF 1 Antenna (2 ea.)	1	2024-T3 Clad	0.050	F3-8	Replace
207	4523108103	• • Packer	1	2024-T3 Clad	0.050	F3-8	Replace
210	4523108108	• • Angle, VHF Antenna	1	2024-T3 Clad	0.050	F3-8	Replace
212	4523108111	• • Plate, Fwd VHF Antenna	1	2024-T3 Clad	0.032	F3-8	Replace
214	4523108112	• • Plate, Center VHF Antenna	1	2024-T3 Clad	0.032	F3-8	Replace
215	4523108113	• • Plate, Aft VHF Antenna	1	2024-T3 Clad	0.032	F3-8	Replace
217	4527102033	• • Angle, Reinforcement	1	2024-T3 Clad	0.040	F3-8	Replace
-	4527102034	• • Angle, Reinforcement	1	2024-T3 Clad	0.050	F3-8	Replace
220	4527202024	• • Mounting Angle	1	2024-T3 Clad	0.050	F3-8	Replace
222	4527202026	• • Strip, Cable Support	1	Nylon 66	0.032	F3-8	Replace
224	4534408101	• • Antenna Doubler (2 ea.)	1	2024-T3 Clad	0.032	F3-8	Replace
226	4534508101	• • Antenna Doubler (2 ea.)	1	2024-T3 Clad	0.050	F3-8	Replace
-	4553306010	• • Doubler, Emergency Egress Light	1	2024-T3 Clad	0.100	F3-8	Replace
229	4553308000	• • Shear Web, LH & RH (4 ea.)	1	2024-T3 Clad	0.032	F3-8	Replace
230	4553308001	• • Stiffener Angle (26 ea.)	1	2024-T3 Clad	0.032	F3-8	Replace
231	4553308002	• • Shear Web, LH & RH (4 ea.)	1	2024-T3 Clad	0.032	F3-8	Replace
233	4553308003	• • Shear Web, LH & RH	1	2024-T3 Clad	0.032	F3-8	Replace
235	4553308004	• • Shear Web, LH & RH	1	2024-T3 Clad	0.032	F3-8	Replace
237	4553308005	• • Shear Web, LH & RH (2 ea.)	1	2024-T3 Clad	0.032	F3-8	Replace
-	4553308007	• • Shear Web, LH & RH	1	2024-T3 Clad	0.032	F3-8	Replace
241	4553308011	• • Attachment Angle (14 ea.)	1	2024-T3 Clad	0.032	F3-8	Replace
244	4553308012	• • Attachment Angle, LH & RH, (5 ea.)	1	2024-T3 Clad	0.032	F3-8	Replace
246	4553308034	• • Shear Web	1	2024-T3 Clad	0.032	F3-8	Replace
248	4553308040	• • Shear Web, LH & RH (4 ea.)	1	2024-T3 Clad	0.032	F3-8	Replace
250	4553308041	• • Shear Web, LH & RH (4 ea.)	1	2024-T3 Clad	0.032	F3-8	Replace
251	4553308042	• • Shear Web	1	2024-T3 Clad	0.032	F3-8	Replace
253	4553308043	• • Shear Web	1	2024-T42 Clad	0.032	F3-8	Replace
		- Not Illustrated					

Center Fuselage Assembly Repair Index
Table 1 (Sheet 5 of 14)

ITEM NO.	DWG. NO.	DESCRIPTION	EFF CODE	MATERIAL	GAGE	FINISH CODE	REPAIR FIG. NO.
255	4553308044	• • Shear Web, LH & RH	1	2024-T3 Clad	0.032	F3-8	Replace
257	4553308045	• • Shear Web	1	2024-T3 Clad	0.032	F3-8	Replace
259	4553308046	• • Shear Web	1	2024-T3 Clad	0.032	F3-8	Replace
261	4553308047	• • Shear Web (2 ea.)	1	2024-T3 Clad	0.050	F3-8	Replace
263	4553308048	• • Shear Web (2 ea.)	1	2024-T3 Clad	0.032	F3-8	Replace
265	4553308049	• • Shear Web (2 ea.)	1	2024-T3 Clad	0.050	F3-8	Replace
267	4553308050	• • Shear Web	1	2024-T3 Clad	0.050	F3-8	Replace
-	4553308508	• • Shear Web	7	2024-T3 Clad	0.050	F3-8	Replace
-	4553308510	• • ShearWeb	4	2024-T42 Clad	0.050	F3-8	Replace
-	4553308051	• • Attachment Angle (22 ea.)	1	2024-T3 Clad	0.050	F3-8	Replace
-	4553308052	• • Attachment Angle (44 ea.)	1	2024-T3 Clad	0.050	F3-8	Replace
276	4553308053 10	• • Attachment Angle (11 ea.)	1	2024-T3 Clad	0.032	F3-8	Replace
279	4553308054	• • Attachment Angle (10 ea.)	1	2024-T3 Clad	0.032	F3-8	Replace
281	4553308059	• • Attachment Angle (2 ea.)	1	2024-T3 Clad	0.050	F3-8	Replace
283	4553308060	• • Seat Track, LH & RH	1	1	2		
286	4553308063	• • Seat Track, LH	1	3	2		
289	4553308064	• • Seat Track, RH	1	3	2		
-	4553308097	• • Angle, LH & RH	1	2024-T3 Clad	0.050	F3-8	Replace
-	4553308101	• • Intercostal	1	2024-T42 Clad	0.040	F3-8	Replace
-	4553308102	• • Intercostal	1	2024-T42 Clad	0.040	F3-8	Replace
-	4553308113	• • Intercostal	1	2024-T42 Clad	0.032	F3-8	Replace
-	4553308114	• • Intercostal	1	2024-T42 Clad	0.032	F3-8	Replace
-	4553308115	• • Attachment Angle	1	2024-T42 Clad	0.032	F3-8	Replace
-	4553308151	• • Attachment Angle	1	2024-T42 Clad	0.032	F3-8	Replace
-	4553308152	• • Intercostal	1	2024-T42 Clad	0.032	F3-8	Replace
-	4553308153	• • Intercostal	1	2024-T42 Clad	0.032	F3-8	Replace
-	4553308155	• • Attachment Angle (22 ea.)	1	2024-T3 Clad	0.050	F3-8	Replace
312	4553308164	• • Splice (4 ea.)	1	2024-T3 Clad	0.080	F3-8	Replace
-	4553308292	• • Plate (2 ea.)	1	2024-T3 Clad	0.063	F3-8	Replace
317	4553308297	• • Splice (12 ea.)	1	2024-T3 Clad	0.080	F3-8	Replace
319	4553308300	• • Longeron (2 ea.)	1	7075T73511		F3-8	Replace
-	4553308303	• • Joint Fitting (2 ea.)	1	7475T7351	0.160	F3-8	Replace
		- Not Illustrated					

Center Fuselage Assembly Repair Index
Table 1 (Sheet 6 of 14)

ITEM NO.	DWG. NO.	DESCRIPTION	EFF CODE	MATERIAL	GAGE	FINISH CODE	REPAIR FIG. NO.
323	4553308342	• • Attachment Angle (2 ea.)	1	2024-T3 Clad	0.050	F3-8	Replace
-	4553308419	• • Support Angle (2 ea.)	1	2024-T3 Clad	0.050	F3-8	Replace
-	4553308424	• • Angle (2 ea.)	1	2024-T3 Clad	0.063	F3-8	Replace
-	4553308425	• • Angle (2 ea.)	1	2024-T3 Clad	0.050	F3-8	Replace
-	4553308429	• • Packer (2 ea.)	1	2024-T3 Clad	0.050	F3-8	Replace
-	4553308430	• • Shim, Laminated (2 ea.)	1	5	0.032	F3-8	Replace
-	4553308432	• • Shim, Laminated (2 ea.)	1	5	0.040	F3-8	Replace
339	4553308474	• • Angle (8 ea.)	1	2024-T42 Clad	0.080	F3-8	Replace
-	4553408413	• • Packer	1	7075T7351	0.250	F3-8	Replace
-	4520008121 7	• • Support Bracket, Cable Tray (2 ea.)	5	2024-T3 Clad	0.040	F3-8	Replace
-	4533408005	• • Bracket	1	2024-T3 Clad	0.050	F3-8	Replace
-	4527202020	• • Packer	1	2024-T3 Clad	0.063	F3-8	Replace
-	4520008465 7	• • Bracket	6	2024-T3 Clad	0.050	F3-8	Replace
-	4520008466 7	• • Bracket	6	2024-T42 Clad	0.040	F3-8	Replace
-	4520008467 7	• • Bracket	6	2024-T42 Clad	0.050	F3-8	Replace
-	4553003000 V22	• • Seal, Drain Valve (9 ea.)	3	Silicone Rubber	0.031		Replace
-	4553003000 V22	• • Support Plate (18 ea.)	3	2024-T3 Clad	0.063	F3-8	Replace
-	4553003006	• • Skin Panel Assy., Upper FS 219.75 to 451.02	1	-	-	-	-
-	4553307055 11	• • • Longeron, Top Emergency Exit	1	7075T7351	1.900	F3-8	Replace
-	4553308055	• • • Shim, Laminated Window Coaming (30 ea.)	1	5	0.032		Replace
-	4553308165	• • • Gusset Plate, FS 369.90 to 398.60	1	2024-T3 Clad	0.032	F3-8	Replace
-	4556200006 13	• • • Window Coaming Assy.	1	-	-	-	-
-	4556200007	• • • • Coaming, Window	1	7075T73	12	F3-8	Replace
-	4520008102	• • Cable Tray	1	2024-T3 Clad	0.020	F3-8	Replace
-	4520008122	• • Support Angle, Connector Bracket (6 ea.)	1	2024-T3 Clad	0.040	F3-8	Replace
-	4520008154	• • Bracket, Plug Break	1	2024-T42 Clad	0050	F3-8	Replace
		- Not Illustrated					

Center Fuselage Assembly Repair Index
Table 1 (Sheet 7 of 14)

ITEM NO.	DWG. NO.	DESCRIPTION	EFF CODE	MATERIAL	GAGE	FINISH CODE	REPAIR FIG. NO.
385	4520008155	• • Bracket, Plug Break	1	2024-T3 Clad	0.050	F3-8	Replace
-	4520008156	• • Bracket, Plug Break (2 ea.)	1	2024-T3 Clad	0.040	F3-8	Replace
-	4520008157	• • Support Bracket, Plug Break (6 ea.)	1	2024-T3 Clad	0.040	F3-8	Replace
-	4520008158	• • Bracket, Plug Break (4 ea.)	1	2024-T3 Clad	0.040	F3-8	Replace
-	4520008159 14	• • Bracket, Plug Break	1	2024-T42 Clad	0.040	F3-8	Replace
-	453003008 V23	• • • Mounting Plate	5	2024-T3 Clad	0.050	F3-8	Replace
-	4520008160	• • Bracket, Plug Break	1	2024-T3 Clad	0.040	F3-8	Replace
-	4553003008 V23	• • Bracket, Plug Break	8	2024-T3 Clad	0.032	F3-8	Replace
-	4520008166	• • Bracket, Plug Break (4 ea.)	1	2024-T3 Clad	0.040	F3-8	Replace
-	4553003008 V23	• • Bracket, Terminal Module (4 ea.)	8	2024-T3 Clad	0.032	F3-8	Replace
407	4520008180	• • Support Block, Cable Tray	1	7075T7351	0.750	F3-8	Replace
409	4520008181	• • Support Block, Cable Tray (3 ea.)	1	7075T7351	0.750	F3-8	Replace
411	4520008183	• • Plate, Tray Joint	1	2024-T3 Clad	0.040	F3-8	Replace
-	4520008186	• • Packer, Cable Tray	1	2024-T3 Clad	0.100	F3-8	Replace
-	4553003008 V27	• • Cleat (6 ea.)	1	2024-T42 Clad	0.040	F3-8	Replace
-	4553003008 V27	• • Packer	1	2024-T3 Clad	0.050	F3-8	Replace
-	4553003008 V27	• • Packer	1	2024-T3 Clad	0.063	F3-8	Replace
-	4553003008 V36	• • Cleat (2 ea.)	1	2024-T3 Clad	0.040	F3-8	Replace
-	4553003008						
	V20	• • Cable Tray Assy.	5	-	-	-	-
	V19	• • • Cable Tray	5	2024-T3 Clad	0.032	F3-8	Replace
	V19	• • • Mounting Bracket (2 ea.)	5	2024-T3 Clad	0.040	F3-8	Replace
-	4553003008						
	V20	• • Mounting Plate Assy.	5	-	-	-	-
	V19	• • • Mounting Bracket	5	2024-T3 Clad	0.040	F3-8	Replace
		- Not Illustrated					

Center Fuselage Assembly Repair Index
Table 1 (Sheet 8 of 14)

ITEM NO.	DWG. NO.	DESCRIPTION	EFF CODE	MATERIAL	GAGE	FINISH CODE	REPAIR FIG. NO.
-	4553003008						
	V34	• • Mounting Plate Assy.	5	-	-	-	-
	V19	• • • Mounting Bracket	5	2024-T3 Clad	0.040	F3-8	Replace
-	4553003008						
	V20	• • Angle Assy. (2 ea.)	5	-	-	-	-
	V19	• • • Angle (2 ea.)	5	2024-T3 Clad	0.040	F3-8	Replace
-	4553003008 V19	• • Bracket (5 ea.)	5	2024-T3 Clad	0.040	F3-8	Replace
-	4553003008 V20	• • Packer	5	2024-T3 Clad	0.063	F3-8	Replace
-	4523708008	• • Mounting, Inertia Switch	1	-	-	-	-
-	4523708005	• • • Bracket	1	2024-T3 Clad	0.040	F3-8	Replace
-	4523708006	• • • Bracket	1	2024-T3 Clad	0.040	F3-8	Replace
448	4553301852	• • Angle, Reinforcement (19 ea.)	1	7075T76	0.040	F3-8	Replace
450	4553301853	• • Splice Angle (20 ea.)	1	7075T76	0.050	F3-8	Replace
452	4553301854	• • Angle, Reinforcement	1	7075T76	0.040	F3-8	Replace
455	4553302653	• • Angle, Reinforcement	1	7075T76	0.050	F3-8	Replace
457	4553302654	• • Splice Angle	1	7075T76	0.050	F3-8	Replace
459	4553302655	• • Angle, Reinforcement	1	7075T76	0.040	F3-8	Replace
461	4553302656	• • Splice Angle	1	7075T76	0.050	F3-8	Replace
463	4553302852	• • Splice Angle	1	2024-T42 Clad	0.050	F3-8	Replace
-	4553302853	• • Reinforcement Strap	1	2024-T42 Clad	0.100	F3-8	Replace
467	4553302854	• • Splice Angle	1	2024-T42 Clad	0.080	F3-8	Replace
469	4553302855	• • Splice Angle	1	7075T6	0.063	F3-8	Replace
471	4553302856	• • Splice Angle	1	2024-T42 Clad	0.050	F3-8	Replace
474	4553302953	• • Splice Strap	1	7075T6	0.063	F3-8	Replace
-	4553302954	• • Splice Plate	1	2024-T3 Clad	0.050	F3-8	Replace
478	4553303052	• • Angle, Reinforcement	1	7075T6	0.063	F3-8	Replace
480	4553303053	• • Splice Angle	1	7075T6	0.063	F3-8	Replace
482	4553303154	• • Splice Strap	1	7075T6	0.125	F3-8	Replace
484	4553303252	• • Angle, Reinforcement	1	7075T6	0.063	F3-8	Replace
486	4553308100	• • Intercostal, Emergency Exit	1	2024-T42 Clad	0.040	F3-8	Replace
488	4553308103	• • Intercostal, Emergency Exit	1	2024-T3 Clad	0.040	F3-8	Replace
490	4553308104	• • Diaphragm, Emergency Exit	1	2024-T3 Clad	0.040	F3-8	Replace
		- Not Illustrated					

Center Fuselage Assembly Repair Index
Table 1 (Sheet 9 of 14)

ITEM NO.	DWG. NO.	DESCRIPTION	EFF CODE	MATERIAL	GAGE	FINISH CODE	REPAIR FIG. NO.
492	4553308111	• • Intercostal, RH Stgr. 4	1	2024-T42 Clad	0.032	F3-8	Replace
495	4553308112	• • Intercostal, RH Stgr. 4	1	2024-T42 Clad	0.032	F3-8	Replace
497	4553308117	• • Intercostal	1	2024-T42 Clad	0.032	F3-8	Replace
499	4553308122	• • Attach Angle, RH Stgr. 4	1	2024-T42 Clad	0.040	F3-8	Replace
504	4553308126	• • Diaphragm (3 ea.)	1	2024-T42 Clad	0.040	F3-8	Replace
-	4553308130	• • Backing Skin, Emergency Exit	1	2024-T42 Clad	0.040	F3-8	Replace
-	4553308131	• • Seal Strip	1	2024-T3 Clad	0.063	F3-8	Replace
-	4553308132	• • Fitting, Emergency Exit	1	7475T7351	0.850	F3-8	Replace
519	4553308133	• • Receptacle Pin, Emergency Exit Door (2 ea.)	1	7475T7351	1.50	F3-8	Replace
521	4553308134 ▷16	• • Pivot Fitting, Emergency Exit (2 ea.)	1	7475T7351	1.40	F3-8	Replace
523	4553308135	• • Attach Angle	1	2024-T3 Clad	0.050	F3-8	Replace
525	4553308138	• • Attach Angle	1	2024-T3 Clad	0.032	F3-8	Replace
-	4553308139	• • Packer	1	2024-T3 Clad	0.050	F3-8	Replace
-	4553308140	• • Stop Pad, Emergency Exit Door	1	4130 Steel ▷16	0.625	F9	Replace
531	4553308142	• • Attach Angle, RH Stgr. 4	1	2024-T42 Clad	0.040	F3-8	Replace
-	4553308143	• • Diaphragm	1	2024-T42 Clad	0.040	F3-8	Replace
536	4553308144	• • Diaphragm	1	2024-T42 Clad	0.040	F3-8	Replace
538	4553308145	• • Diaphragm (3 ea.)	1	7475T7351	0.070	F3-8	Replace
540	4553308146	• • Fitting, Emergency Exit Door	1	7475T7351	-	F3-8	Replace
542	4553308147	• • Fitting, Emergency Exit Door	1	7475T7351	-	F3-8	Replace
-	4553308148	• • Attach Angle (6 ea.)	1	2024-T3 Clad	0.040	F3-8	Replace
-	4553308149	• • Attach Angle (6 ea.)	1	2024-T3 Clad	0.040	F3-8	Replace
548	4553308150	• • Intercostal, LH Stgr. 10	1	2024-T42 Clad	0.032	F3-8	Replace
551	4553308154	• • Intercostal, LH Stgr. 10	1	2024-T42 Clad	0.032	F3-8	Replace
553	4553308156	• • Cleat, Stgr 10 (3 ea.)	1	2024-T42 Clad	0.032	F3-8	Replace
555	4553308162	• • Diaphragm	1	7475T7351	-	F3-8	Replace
557	4553308165	• • Gusset Plate (3 ea.)	1	2024-T3 Clad	0.032	F3-8	Replace
559	4553308167	• • Doubler, Lwr	1	2024-T42 Clad	0.032	F3-8	Replace
562	4553308168	• • Gusset Plate Stgr. 11	1	2024-T3 Clad	0.032	F3-8	Replace
564	4553308169	• • Intercostal Stgr 10	1	2024-T42 Clad	0.032	F3-8	Replace
		- Not Illustrated					

Center Fuselage Assembly Repair Index
Table 1 (Sheet 10 of 14)

ITEM NO.	DWG. NO.	DESCRIPTION	EFF CODE	MATERIAL	GAGE	FINISH CODE	REPAIR FIG. NO.
566	4553308170	• • Attach Angle (2 ea.)	1	2024-T3 Clad	0.032	F3-8	Replace
-	4553308179	• • Attach Angle	1	2024-T42 Clad	0.050	F3-8	Replace
569	4553308180	• • Attach Angle	1	2024-T42 Clad	0.040	F3-8	Replace
571	4553308181	• • Attach Angle	1	2024-T3 Clad	0.032	F3-8	Replace
573	4553308184	• • Gusset Plate FS398.60	1	2024-T3 Clad	0.040	F3-8	Replace
-	4553308186	• • Attach Angle	1	2024-T3 Clad	0.040	F3-8	Replace
-	4553308187	• • Attach Angle	1	2024-T3 Clad	0.032	F3-8	Replace
-	4553308189	• • Packer	1	2024-T42 Clad	0.050	F3-8	Replace
581	4553308190	• • Seal Retainer, Upper	1	2024-T42 Clad	0.032	F3-8	Replace
583	4553308191	• • Seal Retainer, Lwr	1	2024-T42 Clad	0.032	F3-8	Replace
-	4553308198	• • Shear Plate	1	2024-T42 Clad	0.050	F3-8	Replace
589	4553308200	• • Sill, Upper	1	7475T7351	-	F3-8	Replace
591	4553308201	• • Sill, Upper	1	7475T7351	-	F3-8	Replace
594	4553308202 17	• • Intercostal	1	2024-T42 Clad	0.040	F3-8	Replace
596	4553308203	• • Sill, Lwr	1	7075T7351	-	F3-8	Replace
599	4553308205	• • Intercostal	1	2024-T42 Clad	0.050	F3-8	Replace
601	4553308206	• • Corner Seal Plate (2 ea.)	1	2024-T3 Clad	0.032	F3-8	Replace
604	4553308207	• • Joint Diaphragm	1	2024-T42 Clad	0.050	F3-8	Replace
607	4553308209	• • Intercostal	1	2024-T42 Clad	0.050	F3-8	Replace
610	4553308211	• • Intercostal	1	2024-T42 Clad	0.050	F3-8	Replace
612	4553308213	• • Intercostal	1	2024-T42 Clad	0.050	F3-8	Replace
614	4553308215	• • Intercostal	1	2024-T42 Clad	0.040	F3-8	Replace
616	4553308216	• • Plate, Corner Seal (2 ea.)	1	2024-T3 Clad	0.032	F3-8	Replace
618	4553308218	• • Carrier, Lwr Seal	1	2024-T42 Clad	0.032	F3-8	Replace
620	4553308219 17	• • Intercostal	1	2024-T42 Clad	0.040	F3-8	Replace
622	4553308221	• • Fitting, Tension	1	17-4PH H925 Bar	-	F20	Replace
624	4553308222 17	• • Fitting, Tension	1	17-4PH H925 Bar	-	F20	Replace
626	4553308223	• • Fitting, Tension	1	17-4PH H925 Bar	-	F20	Replace
628	4553308224	• • Fitting, Tension	1	17-4PH H925 Bar	-	F20	Replace
-	4553308242	• • Diaphragm	1	2024-T42 Clad	0.032	F3-8	Replace
	4553003008V7	• • Attach Angle (2 ea.)	5	2024-T42 Clad	0.032	F3-8	Replace
632	4553308244	• • Diaphragm	1	2024-T42 Clad	0.032	F3-8	Replace
	4553003008V7	• • Attach Angle (2 ea.)	5	2024-T42 Clad	0.032	F3-8	Replace
		- Not Illustrated					

Center Fuselage Assembly Repair Index
Table 1 (Sheet 11 of 14)

ITEM NO.	DWG. NO.	DESCRIPTION	EFF CODE	MATERIAL	GAGE	FINISH CODE	REPAIR FIG. NO.
635	4553308245	• • Support Fitting	1	7475T7351	-	F3-8	Replace
637	4553308248	• • Support Fitting	1	7475T7351	-	F3-8	Replace
639	4553308249	• • Support Fitting	1	7475T7351	-	F3-8	Replace
641	4553308250	• • Support Fitting (4 ea.)	1	7475T7351	1.000	F3-8	Replace
644	4553308251	• • Support Fitting	1	7475T7351	-	F3-8	Replace
646	4553308254	• • Support Fitting	1	7475T7351	0.800	F3-8	Replace
648	4553308255	• • Support Fitting	1	7475T7351	-	F3-8	Replace
-	4553308273 17	• • Gusset Plate (8 ea.)	1	2024-T3 Clad	0.040	F3-8	Replace
-	4553308276	• • Joint Plate (2 ea.)	1	2024-T3 Clad	0.050	F3-8	Replace
654	4553308277	• • Carrier, Upper Seal	1	2024-T42 Clad	0.032	F3-8	Replace
-	4553308331	• • Attach Angle (3 ea.)	1	2024-T3 Clad	0.032	F3-8	Replace
-	4553308332	• • Joint Plate (2 ea.)	1	2024-T3 Clad	0.050	F3-8	Replace
660	4553308345	• • Cleat (2 ea.)	1	2024-T3 Clad	0.050	F3-8	Replace
663	4553308347	• • Cleat (2 ea.)	1	2024-T3 Clad	0.050	F3-8	Replace
665	4553308361	• • Ramp, Passenger Door (2 ea.)	1	Nylon 66	0.200	-	Replace
667	4553308421	• • Attach Angle (6 ea.)	1	2024-T3 Clad	0.040	F3-8	Replace
669	4553308422	• • Attach Angle (2 ea.)	1	2024-T3 Clad	0.040	F3-8	Replace
671	4553308423 17	• • Attach Angle (2 ea.)	1	2024-T3 Clad	0.040	F3-8	Replace
673	4553308420	• • Joint Plate	1	2024-T42 Clad	0.050	F3-8	Replace
-	4553308446	• • Shim, Laminated (8 ea.)	1	5	0.020	-	Replace
-	4553308447	• • Shim, Laminated (3 ea.)	1	5	0.020	-	Replace
-	4553308448	• • Shim, Laminated (4 ea.)	1	5	0.020	-	Replace
-	4553308449	• • Shim, Laminated (2 ea.)	1	5	0.020	-	Replace
-	4553308450	• • Shim, Laminated (2 ea.)	1	5	0.020	-	Replace
-	4553308451	• • Shim, Laminated (2 ea.)	1	5	0.032	-	Replace
686	4553308462	• • Guide Plate Stgr. 4 (2 ea.)	1	2024-T42 Clad	0.050	F3-8	Replace
-	4553408410	• • Shim, Laminated (16 ea.)	1	5	0.020	-	Replace
-	4553308185	• • Attach Angle (2 ea.)	1	2024-T42 Clad	0.032	F3-8	Replace
692	4553308335	• • Joint Strap	1	2024-T42 Clad	0.050	F3-8	Replace
694	7653308476	• • Weather Seal	1	20	0.015	-	Replace
696	4553308192	• • Seal Retainer (2 ea.)	1	2024-T42 Clad	0.032	F3-8	Replace
698	4553308363	• • Eccentric Bushing (8 ea.)	1	18	1.500	F20	Replace
		- Not Illustrated					

Center Fuselage Assembly Repair Index
Table 1 (Sheet 12 of 14)

ITEM NO.	DWG. NO.	DESCRIPTION	EFF CODE	MATERIAL	GAGE	FINISH CODE	REPAIR FIG. NO.
700	4553308364	• • Eccentric Bushing (8 ea.)	1	18	1.500	F20	Replace
701	4553308365	• • Eccentric Bushing (2 ea.)	1	18	1.500	F20	Replace
703	4553308366	• • Eccentric Bushing (2 ea.)	1	18	1.500	F20	Replace
705	4553308367	• • Retaining Angle (2 ea.)	1	19	0.040	F17	Replace
707	4553308368	• • Retaining Angle (8 ea.)	1	19	0.040	F17	Replace
709	4553308388	• • Mounting Plate	1	2024-T42 Clad	0.050	F3-8	Replace
711	4553308389	• • Diaphragm, Handle Support	1	2024-T42 Clad	0.050	F3-8	Replace
713	4553308483	• • Angle, Handle Support	1	2024-T42 Clad	0.050	F3-8	Replace
715	4520008395	• • Bracket, Ground Plug	6	2024-T3 Clad	0.040	F4-10	Replace
-	4523308014	• • Support Angle	6	2024-T3 Clad	0.032	F4-10	Replace
-	4520008391	• • Clip (2 ea.)	6	2024-T3 Clad	0.040	F4-10	Replace
-	4520008387	• • Bracket	6	2024-T3 Clad	0.040	F4-10	Replace
723	4520008393	• • Clip	6	2024-T3 Clad	0.040	F4-10	Replace
725	4520008394	• • Clip	6	2024-T3 Clad	0.040	F4-10	Replace
727	4520008389	• • Bracket (2 ea.)	6	2024-T3 Clad	0.040	F4-10	Replace
-	4520008390	• • Mounting Plate	6	2024-T3 Clad	0.040	F4-10	Replace
731	4520008388	• • Cable Tray	6	2024-T3 Clad	0.040	F4-10	Replace
735	4553308486	• • Angle (20 ea.)	6	2024-T3 Clad	0.040	F3-8	Replace
737	4553308487	• • Angle	6	2024-T3 Clad	0.040	F3-8	Replace
739	4553308488	• • Angle	6	2024-T3 Clad	0.040	F3-8	Replace
-	4553308489	• • Angle (2 ea.)	6	2024-T3 Clad	0.040	F3-8	Replace
743	4520008473	• • Mounting Bracket FS239.40	10	2024-T3 Clad	0.032	F3-8	Replace
-	4520008211	• • Bracket, Ground Plug	9	2024-T3 Clad	0.032	F3-8	Replace
-	4520008212	• • Bracket (2ea.)	9	2024-T3 Clad	0.032	F3-8	Replace
-	4553308258	• • Gusset Plate	9	2024-T3 Clad	0.040	F3-8	Replace
-	4553308259	• • Packer	9	2024-T3 Clad	0.032	F3-8	Replace
-	4553308204	• • Intercostal	9	2024-T3 Clad	0.040	F3-8	Replace
-	4553308274	• • Packer	9	2024-T3 Clad	0.050	F3-8	Replace
		- Not Illustrated					

EFFECTIVITY CODE	AIRCRAFT SERIAL NUMBERS
1	45-005 AND SUBSEQUENT
2	45-006 ONLY

Center Fuselage Assembly Repair Index
Table 1 (Sheet 13 of 14)

EFFECTIVITY CODE	AIRCRAFT SERIAL NUMBERS
3	45-006 AND SUBSEQUENT
4	45-041 AND SUBSEQUENT
5	45-005 THRU 45-026
6	45-027 AND SUBSEQUENT
7	45-005 THRU 45-040
8	45-005 THRU 45-035
9	45-036 AND SUBSEQUENT
10	45-015 AND SUBSEQUENT

NOTES

1. Make from SB07 09 002 Extrusion
2. Finish parts F3-8, except for 0.130 either side of the raised portion on top of the seat rail, finish F3-10
3. Make from SB07 09 003 Extrusion
4. On Aircraft 45-041 and Subsequent use seat rail PN 4553308061. On Aircraft 45-005 thru 45-040 refer to drawing 4553003002 for spares.
5. Make from MIL-S-22499, Comp 3, Type II, Class I
6. Refer to Dwg. 45533003002v10a for modified D-hole size.
7. Effective for 45-027 and Subsequent. On Aircraft 45-005 thru 45-026 refer to drawing 4553003000 or spares.
8. MS Standard bracket
9. On Aircraft 45-027 and Subsequent use support bracket PN 4520008188.On Aircraft 45-005 thru 45-026 refer to drawing 4553003000 for spares.
10. On Aircraft 45-005 thru 45-013 use attachment angle PN 4553308053. On Aircraft 45-014 and subsequent refer to drawing 4553003000V14.
11. On Aircraft 45-027 and Subsequent use longeron PN 4553307055.On Aircraft 45-005 thru 45-026 refer to drawing 4553003006 for spares.
12. Make from MIL-A-22771 Forging (Vendor Part)
13. On Aircraft 45-033 and Subsequent use window coaming PN 4556200006.On Aircraft 45-005 thru 45-032 refer to drawing 4553003006 for spares.
14. On Aircraft 45-027 and Subsequent use bracket PN 4520008159.On Aircraft 45-005 thru 45-026 refer to drawing 4553003008 for spares.
15. On Aircraft 45-015 refer to drawing 4553003000 or spares.
16. MIL-S-6758 round stock, heat treat to 140-160KSI
17. Effective for 45-036 and Subsequent. On Aircraft 45-005 thru 45-035 refer to drawing 4553003008 for spares.
18. AMS5643 17 4PH, H1025, 1.50 Dia. Rod
19. AISI 302 MIL-S-5059 Annealed
20. Dunlop BS2752 C50 Neoprene.015 thick

Center Fuselage Assembly Repair Index
Table 1 (Sheet 14 of 14)

CENTER FUSELAGE ASSEMBLY - ALLOWABLE DAMAGE

1. Allowable Damage Limits

NOTE: All dimensions are in inches unless otherwise specified.

A. Fasteners
(1) Loose or failed rivets are not allowed. A loose or failed rivet can cause increased stress concentrations on the remaining rivets and lead to progressive joint failure. A careful inspection must be performed to ensure that joint failure has not spread from the area of the loose or failed rivet. (Refer to 51-40-05 for definition of rivet failure.)
(2) Loose or failed screws are not allowed. A loose or failed screw can cause increased stress concentrations on surrounding screws and lead to progressive joint failure. A careful inspection must be performed to ensure that the joint failure has not spread from the area of the loose or failed screw.

B. Cracks
(1) Cracks in any fitting or forging are not allowed. Cracked fittings or forgings must be replaced.
(2) Cracks in components other than fittings and forgings are considered allowable if properly repaired and refinished in accordance with 51-70-00.

C. Deformation
(1) Deformation of the center fuselage structure is not allowed.

D. Corrosion (See Figure 101.)
(1) Corrosion damage is permissible if the affected area is properly repaired, refinished in accordance with 51-30-15 and these repairs do not reduce the original material thickness more than specified. (Refer to 51-70-00.)
(2) Structural components must be repaired or replaced if corrosion repair reduces the original material thickness more than specified.

E. Dents
(1) Dents are permissible if smooth and without abrupt changes in contour, do not exceed 0.100 inch (2.54 mm) in depth, do not exceed 10% of total surface area in one (1) square foot, and are not closer than 0.50 inch (12.7 mm) to any rivet or structural area.
(2) Dents are not allowed if sharp, a fracture of the skin has occurred greater than 0.100 inch (2.54 mm) in depth, exceeds 10% of the total surface area in one (1) square foot, and are closer than 0.50 inch (12.7 mm) to a rivet or structural area. Such dents shall be repaired or the component replaced.

F. Scratches (See Figure 101.)
(1) Scratches are permissible if the affected area is sanded smooth, refinished in accordance with 51-70-00, and the repairs do not reduce the original material thickness more than specified. (Refer to 51-30-15 for protective treatment procedures.)
(2) Structural components must be replaced or repaired if scratches reduce the original material thickness by more than specified.

G. Nicks (See Figure 101.)

(1) Nicks are permissible if the affected area is sanded smooth, refinished in accordance with 51-70-00, and the repairs do not reduce the original material thickness more than specified. (Refer to 51-30-15 for protective treatment procedures.)

(2) Structural components must be replaced or repaired if nicks reduce the original material thickness more than specified.

H. Fittings and Forgings

(1) Fittings or forgings must be replaced if cracked or if fitting hole (non-bushed) tolerance exceeds the allowable limits. (Refer to 51-70-00.)

(2) Fittings or forgings with bushing shall be repaired.

Nominal Thickness (Inch)	Minimum Thickness (Inch)
0.016	0.0135
0.020	0.0175
0.025	0.0225
0.032	0.0295
0.040	0.0370
0.050	0.0460
0.063	0.0590
0.071	0.0670
0.080	0.0760
0.100	0.0950
0.125	0.1200
0.190	0.1800
0.250	0.2370

Allowable Material Thickness
Figure 101

CENTER FUSELAGE ASSEMBLY - REPAIR

1. Repairs

A. Refer to 51-70-00 for typical repairs and allowable wear and repair data.

CENTER FUSELAGE FRAMES - STRUCTURAL IDENTIFICATION

1. Description (See Figure 1 and Table 1.)

A. The center fuselage frames consist of frame assemblies, doublers, and structural subassemblies. The center fuselage frames begin at FS 224.58 and continue through FS 457.72.

B. The fuselage frames provide overall structural continuity and aerodynamics of the aircraft.

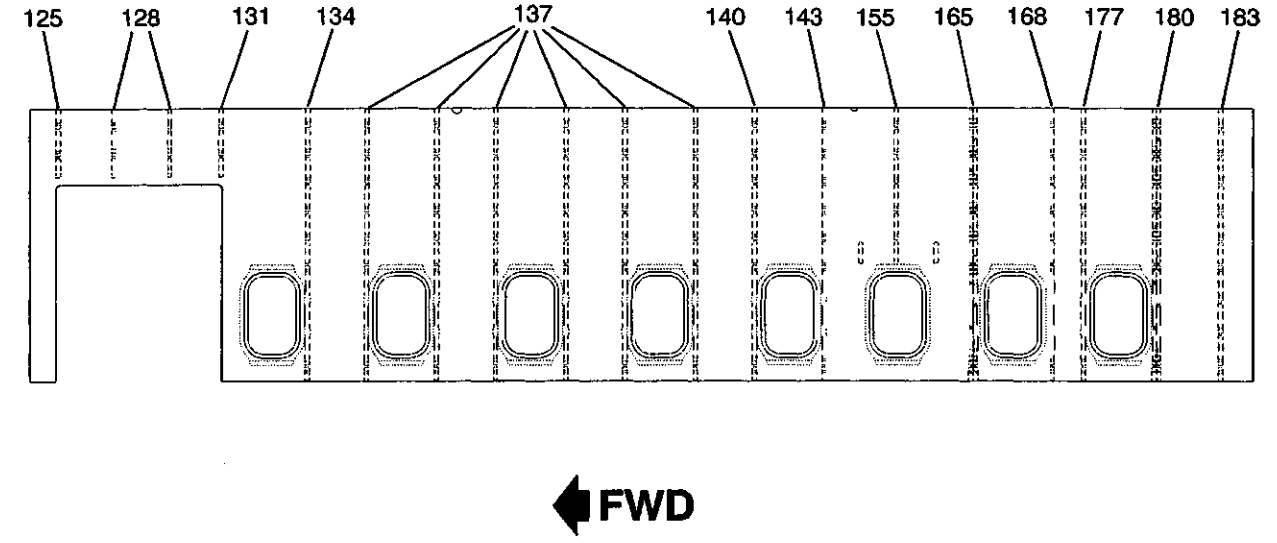

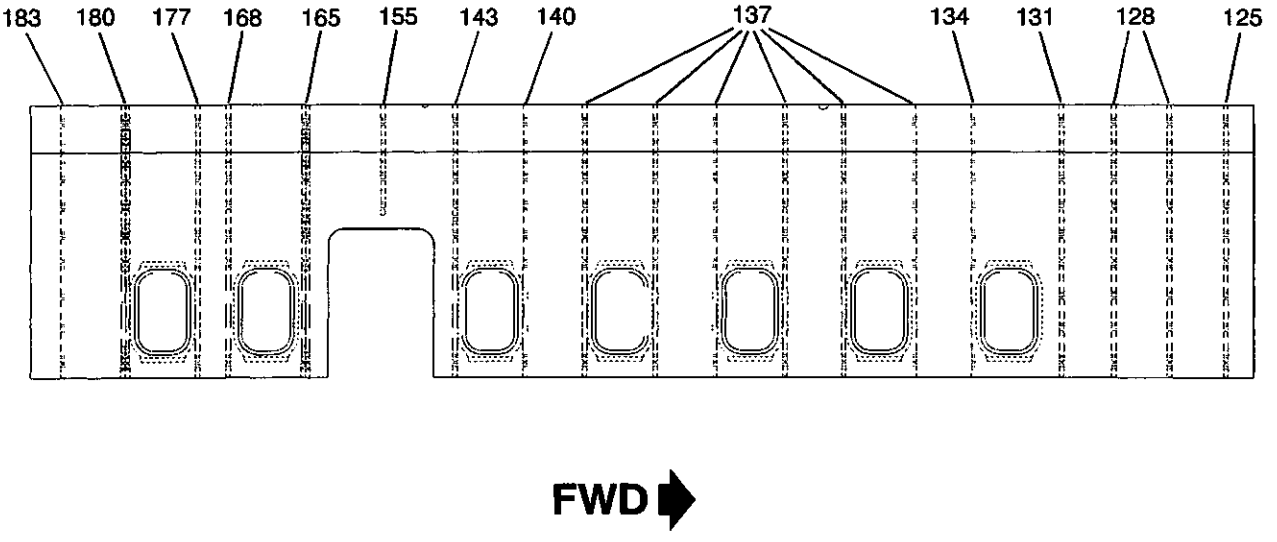

S45-532010-001-01

Center Fuselage Frames Repair Index
Figure 1 (Sheet 1 of 2)

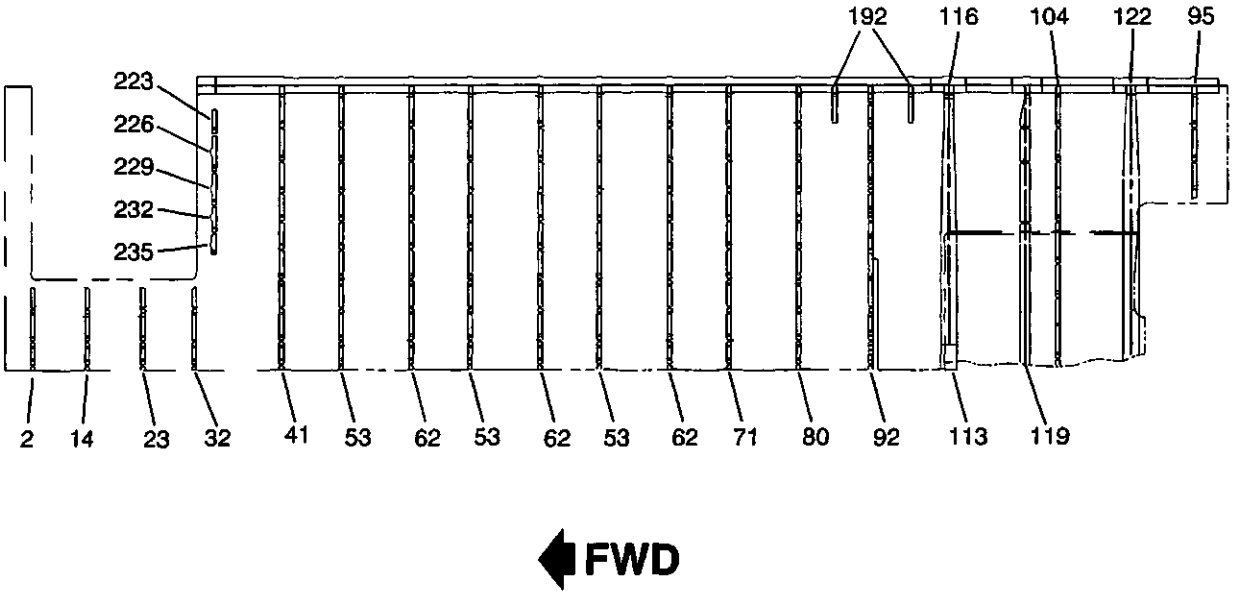

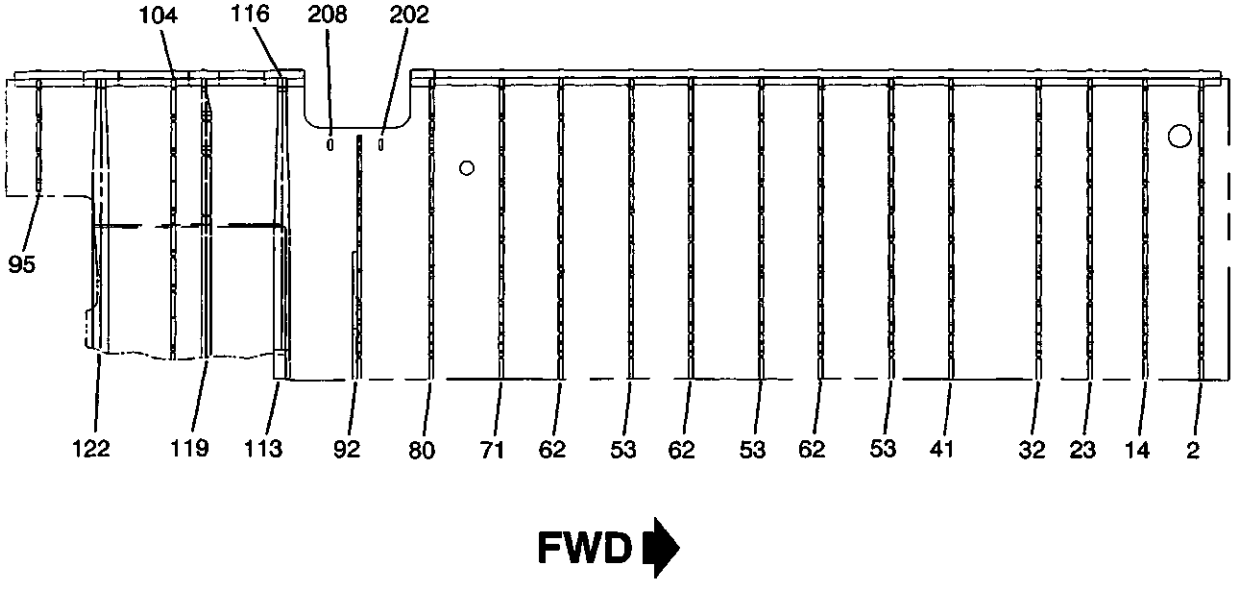

S45-532010-001-02

Center Fuselage Frames Repair Index
Figure 1 (Sheet 2 of 2)

ITEM NO.	DWG. NO.	DESCRIPTION	EFF CODE	MATERIAL	GAGE	FINISH CODE	REPAIR FIG. NO.
		Center Fuselage Frames					
	4553003008	Center Fuselage Upper/Lower Panel Assy.	1	-	-	-	-
	4553003000	• Center Fuselage Lower Panel Assy.	1	-	-	-	-
	4553003001	• • Lower Panel Assy.	1	-	-	-	-
2	4553301400	• • • Frame Assy., Lwr FS 224.58	2	-	-	-	-
-	4553301400	• • • Frame Assy., Lwr FS 249.09	3	-	-	-	-
-	4553301401	• • • • Frame	1	2024-T42 Clad	0.050	F3-8	Replace
-	4553301802	• • • • Angle, Reinforcement	1	2024-T42 Clad	0.040	F3-8	Replace
-	4527102029	• • • • Doubler	1	2024-T3 Clad	0.063	F3-8	Replace
14	4553301500	• • • Frame Assy., Lwr FS 235.11	2	-	-	-	-
-	4553301500	• • • Frame Assy., Lwr FS 259.62	3	-	-	-	-
-	4553301501	• • • • Frame	1	2024-T42 Clad	0.050	F3-8	Replace
-	4553301802	• • • • Angle, Reinforcement	1	2024-T42 Clad	0.040	F3-8	Replace
23	4553301600	• • • Frame Assy., Lwr FS 245.65	2	-	-	-	-
-	4553301600	• • • Frame Assy., Lwr FS 270.15	3	-	-	-	-
-	4553301601	• • • • Frame	1	2024-T42 Clad	0.050	F3-8	Replace
-	4553301802	• • • • Angle, Reinforcement	1	2024-T42 Clad	0.040	F3-8	Replace
32	4553301700	• • • Frame Assy., Lwr FS 256.18	2	-	-	-	-
-	4553301700	• • • Frame Assy., Lwr FS 280.69	3	-	-	-	-
-	4553301701	• • • • Frame	1	2024-T42 Clad	0.050	F3-8	Replace
-	4553301802	• • • • Angle, Reinforcement	1	2024-T42 Clad	0.040	F3-8	Replace
41	4553301800	• • • Frame Assy., Lwr FS 271.88	2	-	-	-	-
-	4553301800	• • • Frame Assy., Lwr FS 296.39	3	-	-	-	-
-	4553301801	• • • • Frame	1	2024-T42 Clad	0.050	F3-8	Replace
-	4553301802	• • • • Angle, Reinforcement	1	2024-T42 Clad	0.040	F3-8	Replace
-	4553301803	• • • • Angle, Reinforcement	1	2024-T42 Clad	0.040	F3-8	Replace
53	4553301900	• • • Frame Assy., Lwr	1	-	-	-	-
-	4553301901	• • • • Frame	1	2024-T42 Clad	0.050	F3-8	Replace
-	4553301802	• • • • Angle, Reinforcement	1	2024-T42 Clad	0.040	F3-8	Replace
62	4553302000	• • • Frame Assy., Lwr	1	-	-	-	-
-	4553302001	• • • • Frame	1	2024-T42 Clad	0.050	F3-8	Replace
-	4553301802	• • • • Angle, Reinforcement	1	2024-T42 Clad	0.040	F3-8	Replace
		- Not Illustrated					

Center Fuselage Frames Repair Index
Table 1 (Sheet 1 of 4)

ITEM NO.	DWG. NO.	DESCRIPTION	EFF CODE	MATERIAL	GAGE	FINISH CODE	REPAIR FIG. NO.
71	4553302500	• • • Frame Assy., Lwr FS 357.40	1	-	-	-	-
-	4553302501	• • • • Frame	1	2024-T42 Clad	0.050	F3-8	Replace
-	4553301802	• • • • Angle, Reinforcement	1	2024-T42 Clad	0.040	F3-8	Replace
80	4553302600	• • • Frame Assy., Lwr FS 369.90	1	-	-	-	-
-	4553302601	• • • • Frame	1	2024-T42 Clad	0.050	F3-8	Replace
-	4553302602	• • • • Angle, Reinforcement	1	2024-T42 Clad	0.050	F3-8	Replace
-	4553302603	• • • • Angle, Reinforcement	1	2024-T42 Clad	0.050	F3-8	Replace
92	4553302701	• • • Frame	1	7475-T7351 Billet	2.500	F3-8	Replace
95	4553303200	• • • Frame Assy., Lwr	1	-	-	-	-
-	4553303201	• • • • Frame	1	2024-T42 Clad	0.050	F3-8	Replace
-	4553303202	• • • • Angle, Reinforcement	1	7075-T76 Clad	0.063	F3-8	Replace
104	4553303000	• • • Frame Assy., LH & RH Lwr	1	-	-	-	-
-	4553303001	• • • • Frame	1	2024-T42 Clad	0.050	F3-8	Replace
-	4553303002	• • • • Angle, Reinforcement	1	2024-T42 Clad	0.063	F3-8	Replace
-	4553003002	• • Skin Assy., Fuselage Auxiliary Pressure	1	-	-	-	-
113	4553302801	• • • Frame, Lwr FS 398.60	1	7475-T7351	4.000	F3-8	Replace
116	4553302802	• • • Quadrant, Lwr Bulkhead FS 398.60	1	7475-T7351	0.110	F3-8	Replace
119	4553302901	• • • Frame, Lwr FS 412.92	1	7475-T7351	3.750	F3-8	Replace
122	4553303101	• • • Frame, Lwr FS 432.97	1	7475-T7351	3.750	F3-8	Replace
	4553003006	• Skin Panel, Upper	1	-	-	-	-
125	4553301451	• • Sector, Frame FS 224.58	2	2024-T42	0.050	F3-8	Replace
-	4553301451	• • Sector, Frame FS 249.09	3	2024-T42	0.050	F3-8	Replace
128	4553301551	• • Sector, Frame (2 ea.)	1	2024-T42	0.050	F3-8	Replace
131	4553301751	• • Sector, Frame FS 258.18	2	2024-T42	0.050	F3-8	Replace
-	4553301751	• • Sector, Frame FS 280.69	3	2024-T42	0.050	F3-8	Replace
134	4553301851	• • Sector, Frame FS 271.88	2	2024-T42	0.050	F3-8	Replace
-	4553301851	• • Sector, Frame FS 269.39	3	2024-T42	0.050	F3-8	Replace
137	4553301951	• • Sector, Frame (6 ea.)	2	2024-T42	0.050	F3-8	Replace
-	4553301951	• • Sector, Frame (4 ea.)	3	2024-T42	0.050	F3-8	Replace
140	4553302551	• • Sector, Frame FS 357.40	1	2024-T42	0.050	F3-8	Replace
143	4553302650	• • Frame Assy, Top FS 369.90 (2 ea.) - Not Illustrated	1	-	-	-	-

Center Fuselage Frames Repair Index
Table 1 (Sheet 2 of 4)

ITEM NO.	DWG. NO.	DESCRIPTION	EFF CODE	MATERIAL	GAGE	FINISH CODE	REPAIR FIG. NO.
146	4553302651	• • • Frame, Upper	1	2024-T42	0.050	F3-8	Replace
149	4553302652	• • • Angle, Reinforcement	1	2024-T42	0.040	F3-8	Replace
152	4553302663	• • Diaphragm FS 391.13	1	2024-T42	0.050	F3-8	Replace
155	4553302750	• • Frame Assy., Top FS 384.38 (2 ea.)	1	-	-	-	-
159	4553302751	• • • Frame, Upper	1	2024-T42	0.050	F3-8	Replace
162	4553302752	• • • Angle, Reinforcement	1	2024-T42	0.040	F3-8	Replace
165	4553302851	• • Front Spar, Top FS 398.60	1	7475-T7351 Billet	2.500	F3-8	Replace
168	4553302950	• • Frame Assy, Top FS 412.88 (2 ea.)		-	-	-	-
171	4553302951	• • • Frame, Upper	1	2024-T42	0.063	F3-8	Replace
174	4553302952	• • • Angle, Reinforcement	1	2024-T42	0.050	F3-8	Replace
177	4553303051	• • Sector, Frame FS 419.57	1	2024-T42	0.050	F3-8	Replace
180	4553303151	• • Mid Spar, Top FS 432.97	1	7475-T7351 Billet	2.500	F3-8	Replace
183	4553303251	• • Sector, Frame FS 444.48	1	2024-T42	0.050	F3-8	Replace
186	4553301710	• Frame, Passenger Door	1	7475-T7351 Billet	3.250	F3-8-11	Replace
189	4553302610	• Frame, Emergency Exit	1	7475-T7351	-	F3-8	Replace
192	4553302660	• Sub-Frame Assy. (2 ea.)	1	-	-	-	-
-	4553302661	• • Sub-Frame	1	2024-T42	0.050	F3-8	Replace
-	4553302662	• • Angle, Reinforcement	1	7075-T76	0.040	F3-8	Replace
199	4553302810	• Frame, Emergency Exit	1	7475-T7351	-	F3-8	Replace
202	4553308125	• Frame	1	2024-T42	0.050	F3-8	Replace
205	4553308127	• Frame Segment (2 ea.)	1	2024-T42	0.032	F3-8	Replace
208	4553308179	• Frame, FS 389.18	1	2024-T42	0.050	F3-8	Replace
211	4553308390	• Frame Segment	1	2024-T42	0.040	F3-8	Replace
214	4553308391	• Frame Segment	1	2024-T42	0.040	F3-8	Replace
217	4553308392	• Frame Segment	1	2024-T42	0.040	F3-8	Replace
220	4553308393	• Frame Segment	1	2024-T42	0.040	F3-8	Replace
223	4553308394	• Frame Segment	1	2024-T42	0.040	F3-8	Replace
226	4553308395	• Frame Segment	1	2024-T42	0.040	F3-8	Replace
229	4553308396	• Frame Segment	1	2024-T42	0.040	F3-8	Replace
232	4553308398	• Frame Segment	1	2024-T42	0.040	F3-8	Replace
235	4553308399	• Frame Segment	1	2024-T42	0.040	F3-8	Replace
		- Not Illustrated					

Center Fuselage Frames Repair Index
Table 1 (Sheet 3 of 4)

EFFECTIVITY CODE	AIRCRAFT SERIAL NUMBERS
1	45-001 AND SUBSEQUENT
2	45-005 AND SUBSEQUENT
3	45-2001 AND SUBSEQUENT

Center Fuselage Frames Repair Index
Table 1 (Sheet 4 of 4)

CENTER FUSELAGE FRAMES - ALLOWABLE DAMAGE

1. Allowable Damage Limits

NOTE: All dimensions are in inches unless otherwise specified.

A. Fasteners
(1) Loose or failed rivets are not allowed. A loose or failed rivet can cause increased stress concentrations on the remaining rivets and lead to progressive joint failure. A careful inspection must be performed to ensure that joint failure has not spread from the area of the loose or failed rivet. (Refer to 51-40-05 for definition of rivet failure.)
(2) Loose or failed screws are not allowed. A loose or failed screw can cause increased stress concentrations on surrounding screws and lead to progressive joint failure. A careful inspection must be performed to ensure that the joint failure has not spread from the area of the loose or failed screw.

B. Cracks
(1) Cracks in any fitting or forging are not allowed. Cracked fittings or forgings must be replaced.
(2) Cracks in components other than fittings and forgings are considered allowable if properly repaired and refinished in accordance with 51-70-00.

C. Deformation
(1) Deformation of the center fuselage frame structure is not allowed.

D. Corrosion (See Figure 101.)
(1) Corrosion damage is permissible if the affected area is properly repaired, refinished in accordance with 51-30-15 and these repairs do not reduce the original material thickness more than specified. (Refer to 51-70-00.)
(2) Structural components must be repaired or replaced if corrosion repair reduces the original material thickness more than specified.

E. Dents
(1) Dents are permissible if smooth and without abrupt changes in contour, do not exceed 0.100 inch (2.54 mm) in depth, do not exceed 10% of total surface area in one (1) square foot, and are not closer than 0.50 inch (12.7 mm) to any rivet or structural area.
(2) Dents are not allowed if sharp, a fracture of the skin has occurred greater than 0.100 inch (2.54 mm) in depth, exceeds 10% of the total surface area in one (1) square foot, and are closer than 0.50 inch (12.7 mm) to a rivet or structural area. Such dents shall be repaired or the component replaced.

F. Scratches (See Figure 101.)
(1) Scratches are permissible if the affected area is sanded smooth, refinished in accordance with 51-70-00, and the repairs do not reduce the original material thickness more than specified. (Refer to 51-30-15 for protective treatment procedures.)
(2) Structural components must be replaced or repaired if scratches reduce the original material thickness by more than specified.

G. Nicks (See Figure 101.)

(1) Nicks are permissible if the affected area is sanded smooth, refinished in accordance with 51-70-00, and the repairs do not reduce the original material thickness more than specified. (Refer to 51-30-15 for protective treatment procedures.)

(2) Structural components must be replaced or repaired if nicks reduce the original material thickness more than specified.

H. Fittings and Forgings

(1) Fittings or forgings must be replaced if cracked or if fitting hole (non-bushed) tolerance exceeds the allowable limits. (Refer to 51-70-00.)

(2) Fittings or forgings with bushing shall be repaired.

Nominal Thickness (Inch)	Minimum Thickness (Inch)
0.016	0.0135
0.020	0.0175
0.025	0.0225
0.032	0.0295
0.040	0.0370
0.050	0.0460
0.063	0.0590
0.071	0.0670
0.080	0.0760
0.100	0.0950
0.125	0.1200
0.190	0.1800
0.250	0.2370

Allowable Material Thickness
Figure 101

CENTER FUSELAGE FRAMES - REPAIR

1. Repairs

A. Refer to 51-70-00 for typical repairs and allowable wear and repair data.

CENTER FUSELAGE STRINGERS - STRUCTURAL IDENTIFICATION

1. Description (See Figure 1 and Table 1.)

A. The center fuselage stringers provide longitudinal support of the overall composition of the fuselage. The stringers are located around the perimeter of the frames. The stringers are spaced approximately five inches apart and are made from aluminum extrusion cut to various lengths.

B. The center fuselage stringer provides overall structural continuity and aerodynamics of the aircraft.

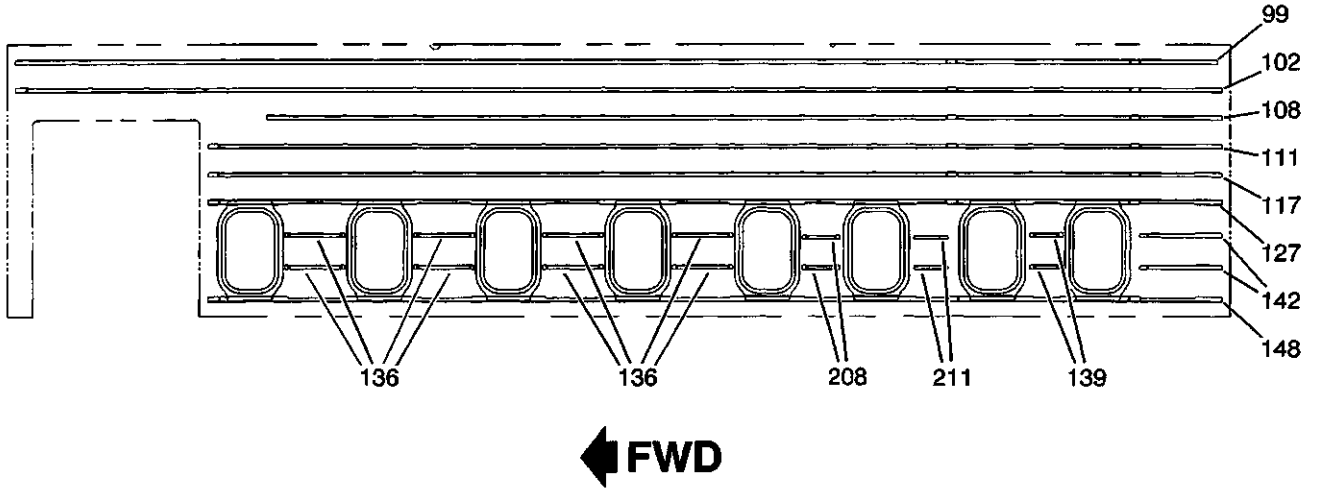

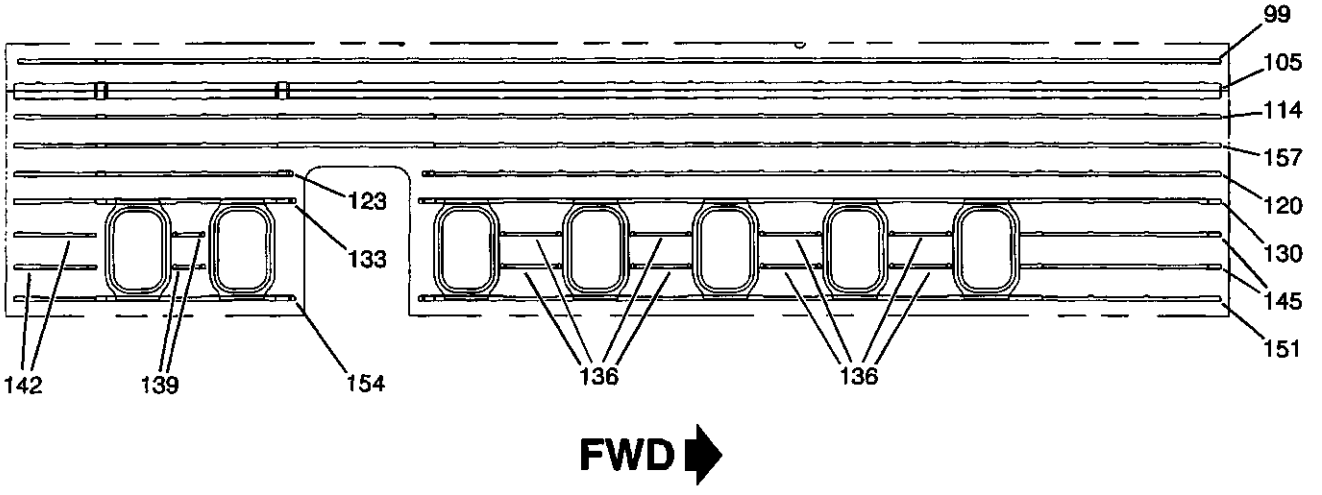

S45-532020-001-01

Center Fuselage Stringers Repair Index
Figure 1 (Sheet 1 of 2)

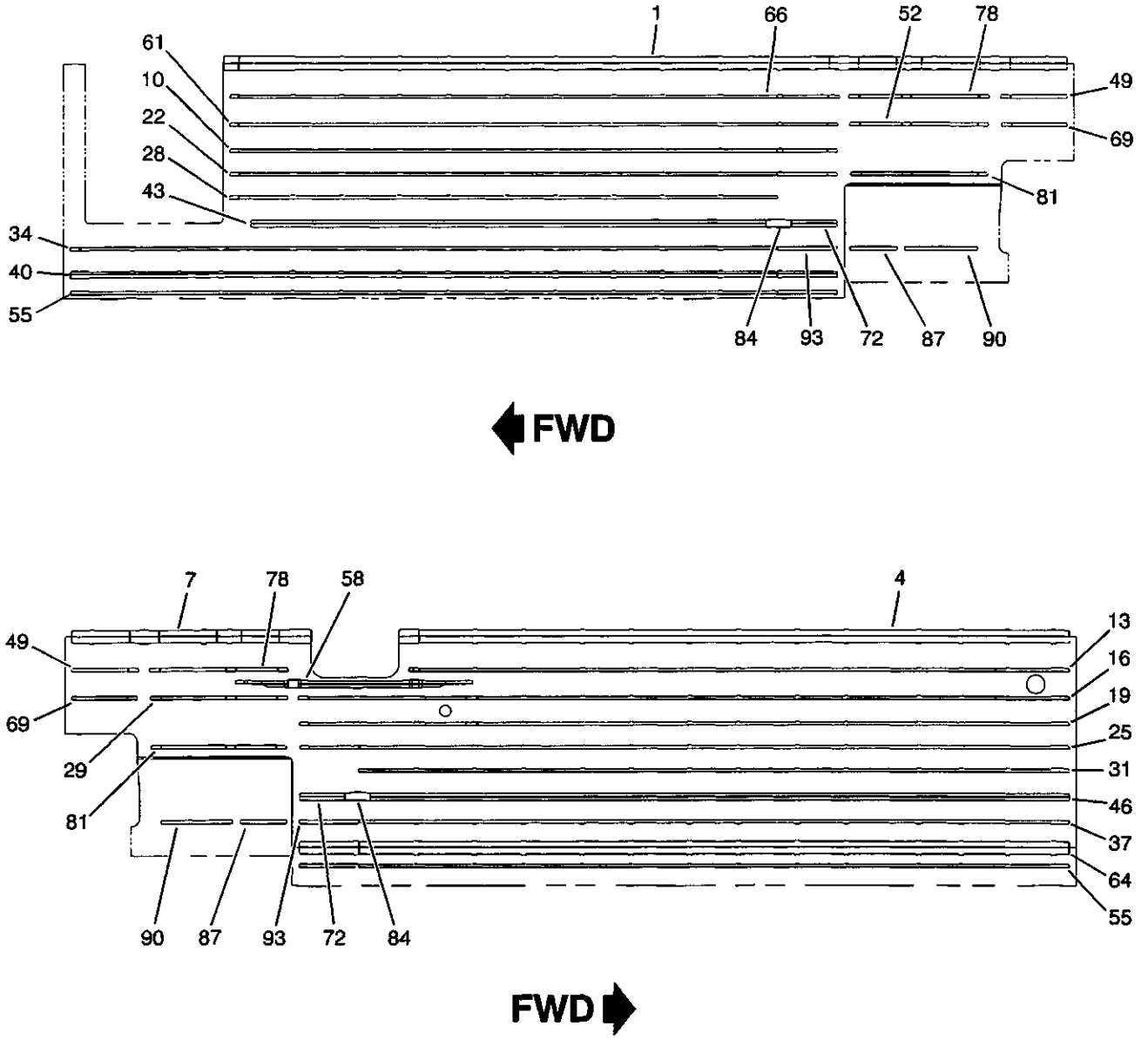

S45-532020-001-02

Center Fuselage Stringers Repair Index
Figure 1 (Sheet 2 of 2)

ITEM NO.	DWG. NO.	DESCRIPTION	EFF CODE	MATERIAL	GAGE	FINISH CODE	REPAIR FIG. NO.
		Center Fuselage Stringers					
	4553003008	Center Fuselage Upper/Lower Panel Assy.	1	-	-	-	-
	4553003000	• Center Fuselage Lower Panel Assy.	1	-	-	-	-
-	4553003001	• • Lower Panel Assy.		-	-	-	-
1	4553307000	• • Stringer No.10, LH FS 256.18 to 451.02	2	2024-T8511 Ext.	1	F3-8	Replace
-	4553307000	• • Stringer No.10, LH FS 280.69 to 451.02	3	2024- T8511 Ext.	1	F3-8	Replace
4	4553307001	• • Stringer No.10, RH FS 219.75 to 384.38	2	2024-T8511 Ext.	1	F3-8	Replace
-	4553307001	• • Stringer No. 10, RH FS 244.26 to 384.38	3	2024-T8511 Ext	1	F3-8	Replace
7	4553307002	• • Stringer No.10, RH FS 251.02 to 388.60	2	2024-T8511 Ext.	1	F3-8	Replace
-	4553207002	• • Stringer No. 10, RH FS 275.53 to 388.60	3	2024-T8511 Ext	1	F3-8	Replace
10	4553307003	• • Stringer No.13, LH FS 256.18 to 398.60	2	2024-T8511 Ext.	2	F3-8	Replace
-	4553307003	• • Stringer No. 13, LH FS 280.69 to 398.60	3	2024-T8511 Ext	2	F3-8	Replace
13	4553307004	• • Stringer No.11, RH FS 219.75 to 384.38	2	2024-T8511 Ext.	2	F3-8	Replace
-	4553307004	• • Stringer No. 11, RH FS 244.26 to 384.38	3	2024-T8511 Ext	1	F3-8	Replace
16	4553307005	• • Stringer No.12, RH FS 219.75 to 398.60	2	2024-T8511 Ext.	2	F3-8	Replace
-	4553307005	• • Stringer No. 12, RH FS 244.26 to 398.60	3	2024-T8511 Ext.	2	F3-8	Replace
19	4553307006	• • Stringer No.13, RH FS 218.00 to 398.60	2	2024-T8511 Ext.	2	F3-8	Replace
-	453307006	• • Stringer No. 13, RH FS 242.51 to 398.60	3	2024-T8511 Ext.	2	F3-8	Replace
22	4553307007	• • Stringer No.14, LH FS 256.18 to 396.60 - Not Illustrated	2	2024-T8511 Ext.	2	F3-8	Replace

Center Fuselage Stringers Repair Index
Table 1 (Sheet 1 of 7)

ITEM NO.	DWG. NO.	DESCRIPTION	EFF CODE	MATERIAL	GAGE	FINISH CODE	REPAIR FIG. NO.
-	4553307007	• • Stringer No. 14, LH FS 280.69 to 396.60	3	2024-T8511 Ext.	2	F3-8	Replace
25	4553307008	• • Stringer No.14, RH FS 219.75 to 398.60	2	2024-T8511 Ext.	2	F3-8	Replace
-	4553307008	• • Stringer No. 14, RH FS 244.26 to 398.60	3	2024-T8511 Ext.	2	F3-8	Replace
28	4553307009	• • Stringer No.15, LH FS 256.18 to 384.38	2	2024-T8511 Ext.	3	F3-8	Replace
-	4553307009	• • Stringer No. 15, LH FS 280.69 to 384.38	3	2024-T8511 Ext.	3	F3-8	Replace
31	4553307010	• • Stringer No.15, RH FS 219.75 to 384.38	2	2024-T8511 Ext.	3	F3-8	Replace
-	4553307010	• • Stringer No.15, RH FS 244.26 to 384.38	3	2024-T8511 Ext.	3	F3-8	Replace
34	4553307011	• • Stringer No.17, LH FS 218.00 to 398.60	2	2024-T8511 Ext.	2	F3-8	Replace
-	4553307011	• • Stringer No.17, LH FS 242.51 to 398.60	3	2024-T8511 Ext.	2	F3-8	Replace
37	4553307012	• • Stringer No.17, RH FS 219.75 to 398.60	2	2024-T8511 Ext.	2	F3-8	Replace
-	4553307012	• • Stringer No. 17, RH FS 244.26 to 398.60	3	2024-T8511 Ext.	2	F3-8	Replace
40	4553307013	• • Stringer No.18, LH FS 219.75 to 398.60	2	2024-T8511 Ext.	4	F3-8	Replace
-	4553307013	• • Stringer No.18, LH FS 244.26 to 398.60	3	2024-T8511 Ext.	4	F3-8	Replace
43	4553307015	• • Stringer No. 16, LH FS 256.18 to 384.38	2	2024-T8511 Ext.	5	F3-8	Replace
-	4553307015	• • Stringer No. 16, LH FS 280.69 to 384.38	3	2024-T8511 Ext.	5	F3-8	Replace
46	4553307016	• • Stringer No.16, RH FS 219.75 to 384.38	2	2024-T8511 Ext.	5	F3-8	Replace
-	4553307016	• • Stringer No.16, RH FS 244.26 to 384.38	3	2024-T8511 Ext.	5	F3-8	Replace
49	4553307019	• • Stringer No.11, LH & RH FS 432.97 to 451.02	1	2024-T8511 Ext.	6	F3-8	Replace
52	4553307029	• • Stringer No.12, LH & RH FS 398.68 to 432.97 - Not Illustrated	1	2024-T8511 Ext.	6	F3-8	Replace

Center Fuselage Stringers Repair Index
Table 1 (Sheet 2 of 7)

ITEM NO.	DWG. NO.	DESCRIPTION	EFF CODE	MATERIAL	GAGE	FINISH CODE	REPAIR FIG. NO.
55	4553307020	• • Stringer No.19, LH & RH FS 219.75 to 398.60	2	2024-T8511 Ext.	2	F3-8	Replace
-	4553307020	• • Stringer No.19, LH & RH FS 244.26 to 398.60	3	2024-T8511 Ext.	2	F3-8	Replace
58	4553307021	• • Longeron, Lower FS 357.40 to 412.88	1	2024-T8511 Ext.	7	F3-8	Replace
61	4553307022	• • Stringer No.12, LH FS 256.18 to 398.60	2	2024-T8511 Ext.	2	F3-8	Replace
-	4553307022	• • Stringer No.12, LH FS 280.69 to 398.60	3	2024-T8511 Ext.	2	F3-8	Replace
64	4553307023	• • Stringer No.18, RH FS 256.18 to 398.60	2	2024-T8511 Ext.	8	F3-8	Replace
-	4553307023	• • Stringer No.18, RH FS 280.69 to 398.60	3	2024-T8511 Ext.	8	F3-8	Replace
66	4553307028	• • Stringer No.11, LH FS 256.18 to 398.60	2	2024-T8511 Ext.	2	F3-8	Replace
-	4553307028	• • Stringer No.11, LH FS 280.69 to 398.60	3	2024-T8511 Ext.	2	F3-8	Replace
69	4553307030	• • Stringer No.12, LH & RH FS 432.97 to 451.02	1	2024-T8511 Ext.	6	F3-8	Replace
72	4553307056	• • Stringer No.16, LH & RH FS 384.38 to 398.60	1	2024-T8511 Ext.	9	F3-8	Replace
-	4553308069	• • Stiffener, Stringer No.16 (65 ea.)	1	2024-T3 Clad	0.040	F3-8	Replace
78	4553307017	• • Stringer No.11, LH & RH FS 398.60 to 432.97	1	2024-T8511 Ext.	6	F3-8	Replace
81	4553307018	• • Stringer No.14, LH & RH FS 398.60 to 432.97	1	2024-T8511 Ext.	6	F3-8	Replace
84	4553308302	• • Joint Strap FS 384.38 (2 ea.)	1	2024-T3 Clad	0.063	F3-8	Replace
	4553003002	• Auxiliary Pressure Skin Assy.	1	-	-	-	-
87	4553307024	• • Stringer, LH & RH Auxiliary Pressure Skin FS 398.60 to 412.92	1	7475-T7351 Plate	0.900	F3-8	Replace
90	4553307025	• • Stringer, Auxiliary Pressure Skin FS 412.92 to 432.97	1	7475-T7351 Plate	0.900	F3-8	Replace
		- Not Illustrated					

Center Fuselage Stringers Repair Index
Table 1 (Sheet 3 of 7)

ITEM NO.	DWG. NO.	DESCRIPTION	EFF CODE	MATERIAL	GAGE	FINISH CODE	REPAIR FIG. NO.
93	4553307026	• • Stringer, LH & RH Auxiliary Pressure Skin FS 384.38 to 398.60	1	7475-T7351 Plate	0.900	F3-8	Replace
-	4553003006	• Skin Panel Assy., Upper FS 219.75 to 451.02	2	-	-	-	-
-	4553003006	• Skin Panel Assy., Upper FS 244.26 to 451.02	3	-	-	-	-
99	4553307031	• • Stringer No.1, LH & RH	1	2024-T8511	2	F3-8	Replace
102	4553307032	• • Stringer No.2, LH	1	2024-T8511	2	F3-8	Replace
105	4553307033	• • Stringer No.2, RH	1	2024-T8511	11	F3-8	Replace
108	4553307034	• • Stringer No.3, LH FS 271.88 to 451.02	2	2024-T8511	2	F3-8	Replace
-	4553307034	• • Stringer No.3, LH FS 296.39 to 451.02	3	2024-T8511	2	F3-8	Replace
111	4553307037	• • Stringer No.4, LH FS 256.18 to 451.02	2	2024-T8511	2	F3-8	Replace
-	4553307037	• • Stringer No.4, LH FS 280.69 to 451.02	3	2024-T8511	2	F3-8	Replace
114	4553307038	• • Stringer No.3, RH FS 256.18 to 451.02	2	2024-T8511	2	F3-8	Replace
-	4553307038	• • Stringer No.3, RH FS 280.69 to 451.02	3	2024-T8511	2	F3-8	Replace
117	4553307039	• • Stringer No.5, LH FS 256.16 to 451.02	2	2024-T8511	2	F3-8	Replace
-	4553307039	• • Stringer No.5, LH FS 280.69 to 451.02	3	2024-T8511	2	F3-8	Replace
120	4553307040	• • Stringer No.5, RH FS 219.75 to 369.90	2	2024-T8511	2	F3-8	Replace
-	4553307040	• • Stringer No.5, RH FS 244.26 to 369.90	3	2024-T8511	2	F3-8	Replace
123	4553307041	• • Stringer No.5, RH FS 398.60 to 451.02	1	2024-T8511	2	F3-8	Replace
127	4553307042	• • Stringer No.6, LH FS 256.18 to 451.02	2	2024-T8511	10	F3-8	Replace
-	4553307042	• • Stringer No.6, LH FS 280.69 to 451.02 - Not Illustrated	3	2024-T8511	10	F3-8	Replace

Center Fuselage Stringers Repair Index
Table 1 (Sheet 4 of 7)

ITEM NO.	DWG. NO.	DESCRIPTION	EFF CODE	MATERIAL	GAGE	FINISH CODE	REPAIR FIG. NO.
130	4553307043	• • Stringer No.6, RH FS 219.75 to 369.90	2	2024-T8511	10	F3-8	Replace
-	4553307043	• • Stringer No.6, RH FS 244.26 to 369.90	3	2024-T8511	10	F3-8	Replace
133	4553307044	• • Stringer No.6, RH FS 398.60 to 451.02	1	2024-T8511	10	F3-8	Replace
136	4553307045	• • Stringer No.7 & 8, LH & RH (16 ea.)	1	2024-T8511	2	F3-8	Replace
139	4553307046	• • Stringer No.7 & 8, LH & RH FS 412.88 to 419.57 (4 ea.)	1	2024-T8511	2	F3-8	Replace
142	4553307049	• • Stringer No.7 & 8, LH & RH FS 432.97 to 451.02 (4 ea.)	1	2024-T8511	2	F3-8	Replace
145	4553307050	• • Stringer No.7 & 8, RH FS 219.75 to 256.18 (2 ea.)	2	2024-T8511	2	F3-8	Replace
-	4553307050	• • Stringer No.7 & 8, RH FS 244.26 to 280.69 (2ea.)	3	2024-T8511	2	F3-8	Replace
148	4553307051	• • Stringer No.9, LH FS 256.18 to 451.02	2	2024-T8511	10	F3-8	Replace
-	4553307051	• • Stringer No.9, LH FS 280.69 to 451.02	3	2024-T8511	10	F3-8	Replace
151	4553307052	• • Stringer No.9, RH FS 219.75 to 369.90	2	2024-T8511	10	F3-8	Replace
-	4553307052	• • Stringer No.9, RH FS 244.26 to 369.90	3	2024-T8511	10	F3-8	Replace
154	4553307053	• • Stringer No.9, RH FS 398.60 to 451.02	1	2024-T8511	2	F3-8	Replace
157	4553307054	• • Stringer No.4, RH FS 219.75 to 451.02	2	2024-T8511	2	F3-8	Replace
-	4553307054	• • Stringer No.4, RH FS 244.26 to 451.02	3	2024-T8511	2	F3-8	Replace
-	4553308118	• • Intercostal, Stringer No.4 FS 357.40 to 369.90	1	2024-T42	0.032	F3-8	Replace
-	4553308119	• • Intercostal, Stringer No.4 FS 398.60 to 412.88	1	2024-T42	0.032	F3-8	Replace
-	4553308120	• • Intercostal, Stringer No.3 FS 384.38 to 398.60	1	2024-T42	0.032	F3-8	Replace
-	4553308121	• • Intercostal, Stringer No.3 FS 369.90 to 384.38 - Not Illustrated	1	2024-T42	0.032	F3-8	Replace

Center Fuselage Stringers Repair Index
Table 1 (Sheet 5 of 7)

ITEM NO.	DWG. NO.	DESCRIPTION	EFF CODE	MATERIAL	GAGE	FINISH CODE	REPAIR FIG. NO.
-	4553308123	• • Angle, RH Stringer No.3 FS 384.38	1	2024-T42	0.032	F3-8	Replace
-	4553308124	• • Angle, RH Stringer No.3 FS 398.60	1	2024-T42	0.032	F3-8	Replace
-	4553308157	• • Intercostal, Stringer No.6 FS 369.90 to 384.38	1	2024-T42	0.032	F3-8	Replace
-	4553308158	• • Angle, RH Stringer No.6 FS 398.60	1	2024-T3	0.032	F3-8	Replace
-	4553308159	• • Intercostal, Stringer No.5 FS 369.90 to 384.38	1	2024-T42	0.032	F3-8	Replace
-	4553308160	• • Intercostal, Stringer No.5 FS 384.38 to 398.60	1	2024-T42	0.032	F3-8	Replace
-	4553308161	• • Attachment Angle, LH Stringer No.5 (2 ea.)	1	2024-T3	0.032	F3-8	Replace
-	4553308240	• • Intercostal, Stringer No.2 FS 245.64 to 256.18	2	2024-T3	0.032	F3-8	Replace
-	4553308240	• • Intercostal, Stringer No.2 FS 270.15 to 280.69	3	2024-T3	0.032	F3-8	Replace
-	4553308241	• • Intercostal, LH Stringer No.2 (2 ea.)	1	2024-T3	0.032	F3-8	Replace
-	4553308243	• • Angle, LH Stringer No.2 (3 ea.)	1	2024-T42	0.032	F3-8	Replace
-	4553308346	• • Attachment Angle, LH Stringer No.6	1	2024-T3	0.032	F3-8	Replace
-	4553308346	• • Attachment Angle, LH Stringer No.6 (2 ea.)	1	2024-T42	0.032	F3-8	Replace
208	4553307047	• Stringer No.7 & 8, LH FS 369.30 to 377.57	1	2024-T8511 Ext.	▷2	F3-8	Replace
211	4553307048	• Stringer No.7 & 8, LH FS 391.13 to 398.60 - Not Illustrated	1	2024-T8511 Ext.	▷2	F3-8	Replace

Center Fuselage Stringers Repair Index
Table 1 (Sheet 6 of 7)

EFFECTIVITY CODE	AIRCRAFT SERIAL NUMBERS
1	45-005 AND SUBSEQUENT
2	45-005 AND SUBSEQUENT
3	45-2001 AND SUBSEQUENT

NOTES

1. SB07 10 002 Extrusion
2. SB07 10 001 Extrusion
3. SB07 10 003 Extrusion
4. SB07 10 005 Extrusion
5. SB07 10 004 Extrusion
6. CrueZet Extrusion #526
7. SB07 02 605 Extrusion
8. SB07 10 010 Extrusion
9. SB07 09 001 Extrusion
10. SB07 10 009 Extrusion
11. SB07 10 011 Extrusion

Center Fuselage Stringers Repair Index
Table 1 (Sheet 7 of 7)

CENTER FUSELAGE STRINGERS - ALLOWABLE DAMAGE

1. Allowable Damage Limits

NOTE: All dimensions are in inches unless otherwise specified.

A. Fasteners
(1) Loose or failed rivets are not allowed. A loose or failed rivet can cause increased stress concentrations on the remaining rivets and lead to progressive joint failure. A careful inspection must be performed to ensure that joint failure has not spread from the area of the loose or failed rivet. (Refer to 51-40-05 for definition of rivet failure.)
(2) Loose or failed screws are not allowed. A loose or failed screw can cause increased stress concentrations on surrounding screws and lead to progressive joint failure. A careful inspection must be performed to ensure that the joint failure has not spread from the area of the loose or failed screw.

B. Cracks
(1) Cracks in any fitting or forging are not allowed. Cracked fittings or forgings must be replaced.
(2) Cracks in components other than fittings and forgings are considered allowable if properly repaired and refinished in accordance with 51-70-00.

C. Deformation
(1) Deformation of the center fuselage stringer structure is not allowed.

D. Corrosion (See Figure 101.)
(1) Corrosion damage is permissible if the affected area is properly repaired, refinished in accordance with 51-30-15 and these repairs do not reduce the original material thickness more than specified. (Refer to 51-70-00.)
(2) Structural components must be repaired or replaced if corrosion repair reduces the original material thickness more than specified.

E. Dents
(1) Dents are permissible if smooth and without abrupt changes in contour, do not exceed 0.100 inch (2.54 mm) in depth, do not exceed 10% of total surface area in one (1) square foot, and are not closer than 0.50 inch (12.7 mm) to any rivet or structural area.
(2) Dents are not allowed if sharp, a fracture of the skin has occurred greater than 0.100 inch (2.54 mm) in depth, exceeds 10% of the total surface area in one (1) square foot, and are closer than 0.50 inch (12.7 mm) to a rivet or structural area. Such dents shall be repaired or the component replaced.

F. Scratches (See Figure 101.)
(1) Scratches are permissible if the affected area is sanded smooth, refinished in accordance with 51-70-00, and the repairs do not reduce the original material thickness more than specified. (Refer to 51-30-15 for protective treatment procedures.)
(2) Structural components must be replaced or repaired if scratches reduce the original material thickness by more than specified.

G. Nicks (See Figure 101.)
   (1) Nicks are permissible if the affected area is sanded smooth, refinished in accordance with 51-70-00, and the repairs do not reduce the original material thickness more than specified. (Refer to 51-30-15 for protective treatment procedures.)
   (2) Structural components must be replaced or repaired if nicks reduce the original material thickness more than specified.

H. Fittings and Forgings
   (1) Fittings or forgings must be replaced if cracked or if fitting hole (non-bushed) tolerance exceeds the allowable limits. (Refer to 51-70-00.)
   (2) Fittings or forgings with bushing shall be repaired.

Nominal Thickness (Inch)	Minimum Thickness (Inch)
0.016	0.0135
0.020	0.0175
0.025	0.0225
0.032	0.0295
0.040	0.0370
0.050	0.0460
0.063	0.0590
0.071	0.0670
0.080	0.0760
0.100	0.0950
0.125	0.1200
0.190	0.1800
0.250	0.2370

Allowable Material Thickness
Figure 101

CENTER FUSELAGE STRINGERS - REPAIR

1. Repairs

A. Refer to 51-70-00 for typical repairs and allowable wear and repair data.

CENTER FUSELAGE SKINS - STRUCTURAL IDENTIFICATION

1. Description (See Figure 1 and Table 1.)

A. The center fuselage skins provide aerodynamic contour and pressure containment in the pressure vessel of the fuselage.

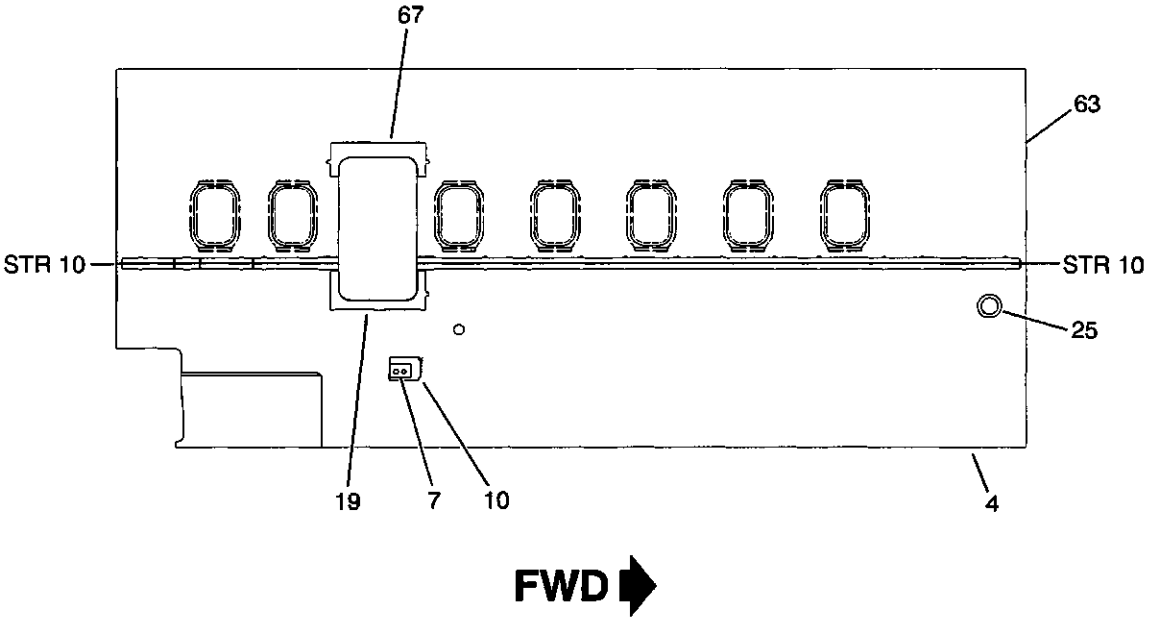

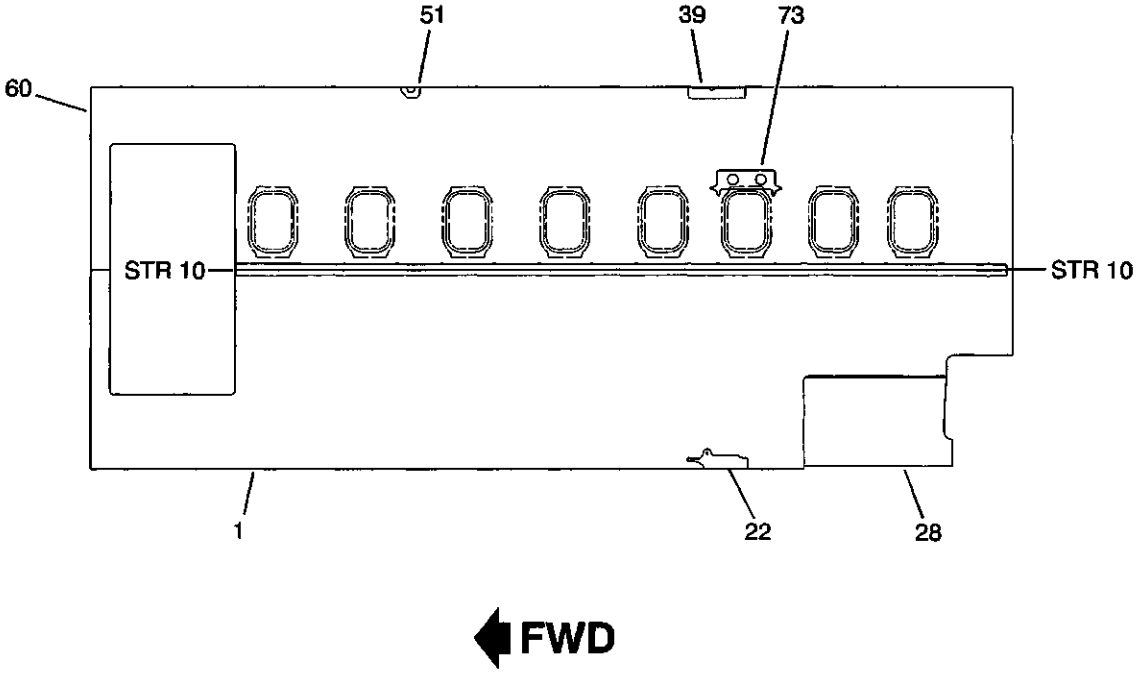

S45-532040-001-01

Center Fuselage Skins Repair Index
Figure 1

ITEM NO.	DWG. NO.	DESCRIPTION	EFF CODE	MATERIAL	GAGE	FINISH CODE	REPAIR FIG. NO.
		Center Fuselage Skins					
	4553003008	Center Fuselage Upper/Lower Panel Assy.	1	-	-	-	-
	4553003000	• Center Fuselage Lower Panel Assy.	1	-	-	-	-
1	4553306000	• • Skin Panel, LH Lower	1	2024-T3 Clad	0.100	[1]	Replace
4	4553306001[2]	• • Skin Panel RH, Lower	1	2024-T3 Clad	0.100	[1]	Replace
7	4553308475[2]	• • Doubler, Toilet	1	2024-T42 Clad	0.050	F3-8-11	Replace
10	4553003001V5	• • Doubler, External	2	2024-T3 Clad	0.050	F4-8	Replace
-	4553003001V6	• • Doubler, External	3	2024-T3 Clad	0.050	F4-8	Replace
-	4553003001V7	• • Doubler, External	4	2024-T3 Clad	0.050	F4-8	Replace
19	4553306003	• • Doubler, Lower Emergency Exit	1	2024-T3 Clad	0.080	F3-8	Replace
22	4553306011	• • Doubler FS 396.90 to 384.38	1	2024-T42 Clad	0.050	F3-8	Replace
25	4553306012	• • Doubler, Wing Light FS 228.99	5	2024-T42 Clad	0.100	F3-8	Replace
-	4553306012	• • Doubler, Wing Light FS 253.50	6	2024-T42 Clad	0.100	F3-8	Replace
-	4553003002	• • Skin Assy., Auxiliary Pressure	1	-	-	-	-
28	4553306002[2]	• • Skin, Fwd Auxiliary Pressure	1	2024-T3 Clad	0.120	F3-8	Replace
-	4553003006	• • Skin Panel Assy., Upper	1	-	-	-	-
39	4523108104	• • Doubler, VHF 2 Antenna	1	2024-T42 Clad	0.050	F3-8	Replace
-	4523108105	• • Angle, VHF 2 Antenna	1	2024-T3 Clad	0.050	F4-8	Replace
-	4523108106	• • Nutplate, VHF 2 Antenna	1	2024-T351 Clad	0.100	F3-8	Replace
-	4523108107	• • Packer, VHF 2 Antenna	1	2024-T3 Clad	0.050	F4-8	Replace
-	4523108108	• • Angle, VHF 2 Antenna	1	2024-T3 Clad	0.050	F4-8	Replace
-	4523108109	• • Nutplate, Fwd VHF 2 Antenna	1	2024-T3 Clad	0.032	F4-8	Replace
-	4523108110	• • Nutplate, Aft VHF 2 Antenna	1	2024-T3 Clad	0.032	F4-8	Replace
51	4534508104	• • Doubler, ADF 1 Antenna	1	2024-T3 Clad	0.050	F4-8	Replace
-	4534508106	• • Packer, Antenna ADF 1	1	2024-T3 Clad	0.125	F4-8	Replace
-	4534508107	• • Packer, Antenna ADF 1	1	2024-T3 Clad	0.125	F4-8	Replace
60	4553306005	• • Skin Panel, LH Top	1	2024-T3 Clad	0.100	[3]	Replace
63	4553306006	• • Skin Panel, RH Top	1	2024-T3 Clad	0.080	[3]	Replace
67	4553306007	• • Doubler, Emergency Exit	1	2024-T3 Clad	0.080	F3-8	Replace
		- Not Illustrated					

Center Fuselage Skins Repair Index
Table 1 (Sheet 1 of 2)

ITEM NO.	DWG. NO.	DESCRIPTION	EFF CODE	MATERIAL	GAGE	FINISH CODE	REPAIR FIG. NO.
-	4553306008	• • Skin Strap	1	2024-T3 Clad	0.080	F3-8	Replace
73	4553308166	• • Skin FS 369.90 to 398.60 (2 ea.)	1	2024-T42 Clad	0.032	F3-8	Replace
-	4553308239	• Skin, Lower - Not Illustrated	1	2024-T42 Clad	0.040	F3-8	Replace

EFFECTIVITY CODE	AIRCRAFT SERIAL NUMBERS
1	45-005 AND SUBSEQUENT
2	45-005 THRU 45-006
3	45-007 THRU 45-026
4	45-027 AND SUBSEQUENT
5	45-005 AND SUBSEQUENT
6	45-2001 AND SUBSEQUENT

NOTES

1. Finish interior F3-8, finish exterior F3-8 Aft of the fairing line, F3 forward of the fairing line
2. Refer to drawing 453003001 for variation.
3. Finish interior F3-8, exterior F3

Center Fuselage Skins Repair Index
Table 1 (Sheet 2 of 2)

CENTER FUSELAGE SKINS - ALLOWABLE DAMAGE

1. Allowable Damage Limits

NOTE: All dimensions are in inches unless otherwise specified.

A. Fasteners
(1) Loose or failed rivets are not allowed. A loose or failed rivet can cause increased stress concentrations on the remaining rivets and lead to progressive joint failure. A careful inspection must be performed to ensure that joint failure has not spread from the area of the loose or failed rivet. (Refer to 51-40-05 for definition of rivet failure.)
(2) Loose or failed screws are not allowed. A loose or failed screw can cause increased stress concentrations on surrounding screws and lead to progressive joint failure. A careful inspection must be performed to ensure that the joint failure has not spread from the area of the loose or failed screw.

B. Cracks
(1) Cracks in any fitting or forging are not allowed. Cracked fittings or forgings must be replaced.
(2) Cracks in components other than fittings and forgings are considered allowable if properly repaired and refinished in accordance with 51-70-00.

C. Deformation
(1) Deformation of the center fuselage skin structure is not allowed.

D. Corrosion (See Figure 101.)
(1) Corrosion damage is permissible if the affected area is properly repaired, refinished in accordance with 51-30-15 and these repairs do not reduce the original material thickness more than specified. (Refer to 51-70-00.)
(2) Structural components must be repaired or replaced if corrosion repair reduces the original material thickness more than specified.

E. Dents
(1) Dents are permissible if smooth and without abrupt changes in contour, do not exceed 0.100 inch (2.54 mm) in depth, do not exceed 10% of total surface area in one (1) square foot, and are not closer than 0.50 inch (12.7 mm) to any rivet or structural area.
(2) Dents are not allowed if sharp, a fracture of the skin has occurred greater than 0.100 inch (2.54 mm) in depth, exceeds 10% of the total surface area in one (1) square foot, and are closer than 0.50 inch (12.7 mm) to a rivet or structural area. Such dents shall be repaired or the component replaced.

F. Scratches (See Figure 101.)
(1) Scratches are permissible if the affected area is sanded smooth, refinished in accordance with 51-70-00, and the repairs do not reduce the original material thickness more than specified. (Refer to 51-30-15 for protective treatment procedures.)
(2) Structural components must be replaced or repaired if scratches reduce the original material thickness by more than specified.

G. Nicks (See Figure 101.)
   (1) Nicks are permissible if the affected area is sanded smooth, refinished in accordance with 51-70-00, and the repairs do not reduce the original material thickness more than specified. (Refer to 51-30-15 for protective treatment procedures.)
   (2) Structural components must be replaced or repaired if nicks reduce the original material thickness more than specified.

H. Fittings and Forgings
   (1) Fittings or forgings must be replaced if cracked or if fitting hole (non-bushed) tolerance exceeds the allowable limits. (Refer to 51-70-00.)
   (2) Fittings or forgings with bushing shall be repaired.

Nominal Thickness (Inch)	Minimum Thickness (Inch)
0.016	0.0135
0.020	0.0175
0.025	0.0225
0.032	0.0295
0.040	0.0370
0.050	0.0460
0.063	0.0590
0.071	0.0670
0.080	0.0760
0.100	0.0950
0.125	0.1200
0.190	0.1800
0.250	0.2370

Allowable Material Thickness
Figure 101

CENTER FUSELAGE SKINS - REPAIR

1. Repairs

A. Refer to 51-70-00 for typical repairs and allowable wear and repair data.

FUSELAGE FUEL CELL ASSEMBLY - STRUCTURAL IDENTIFICATION

1. Description (See Figure 1 and Table 1.)

A. The fuselage fuel cell assembly, FS 451.02 to FS 503.68, consists of frames, stringers, skins and supporting structure to contain the fuselage fuel bladder and related equipment.

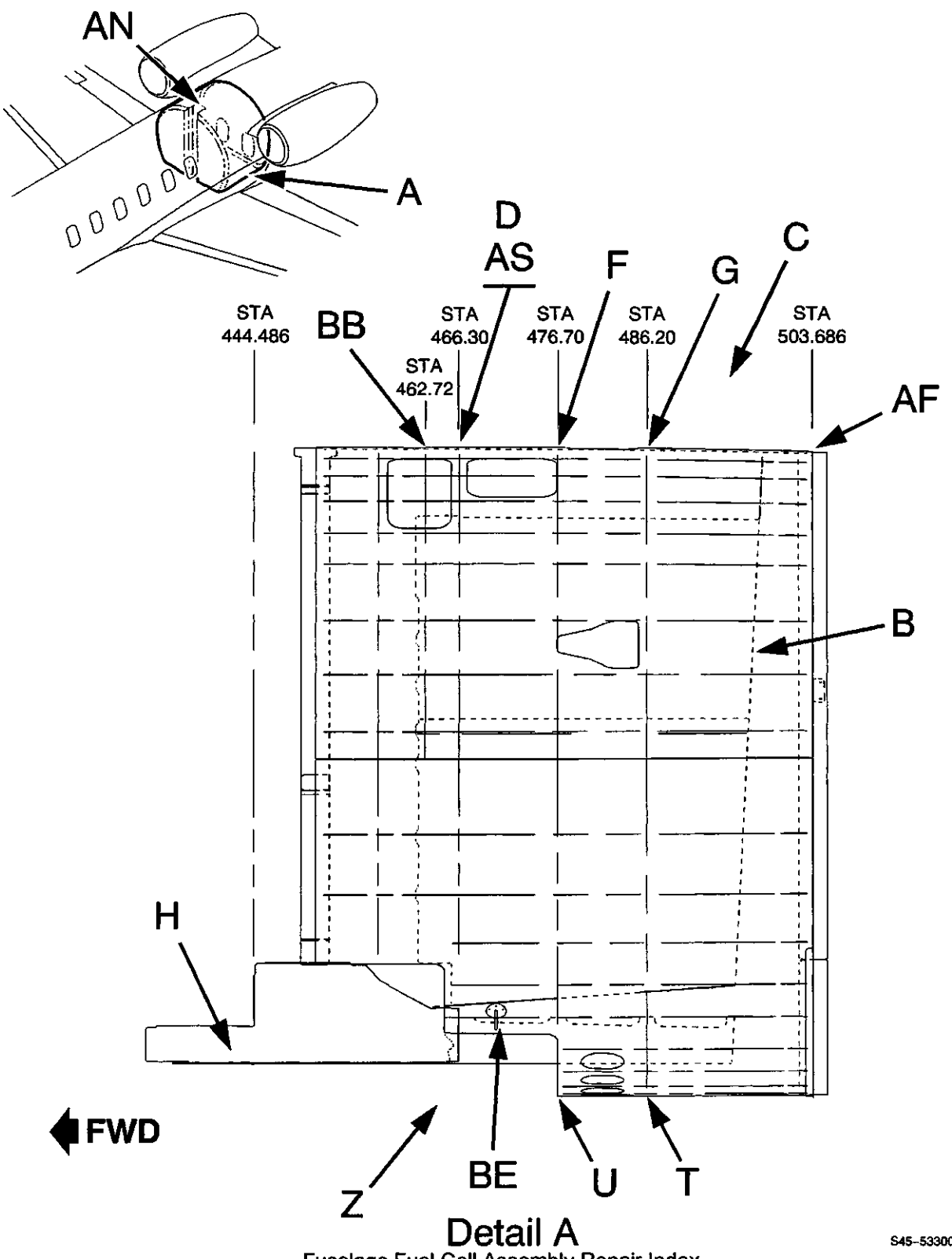

S45-533000-001-01

Fuselage Fuel Cell Assembly Repair Index
Figure 1 (Sheet 1 of 24)

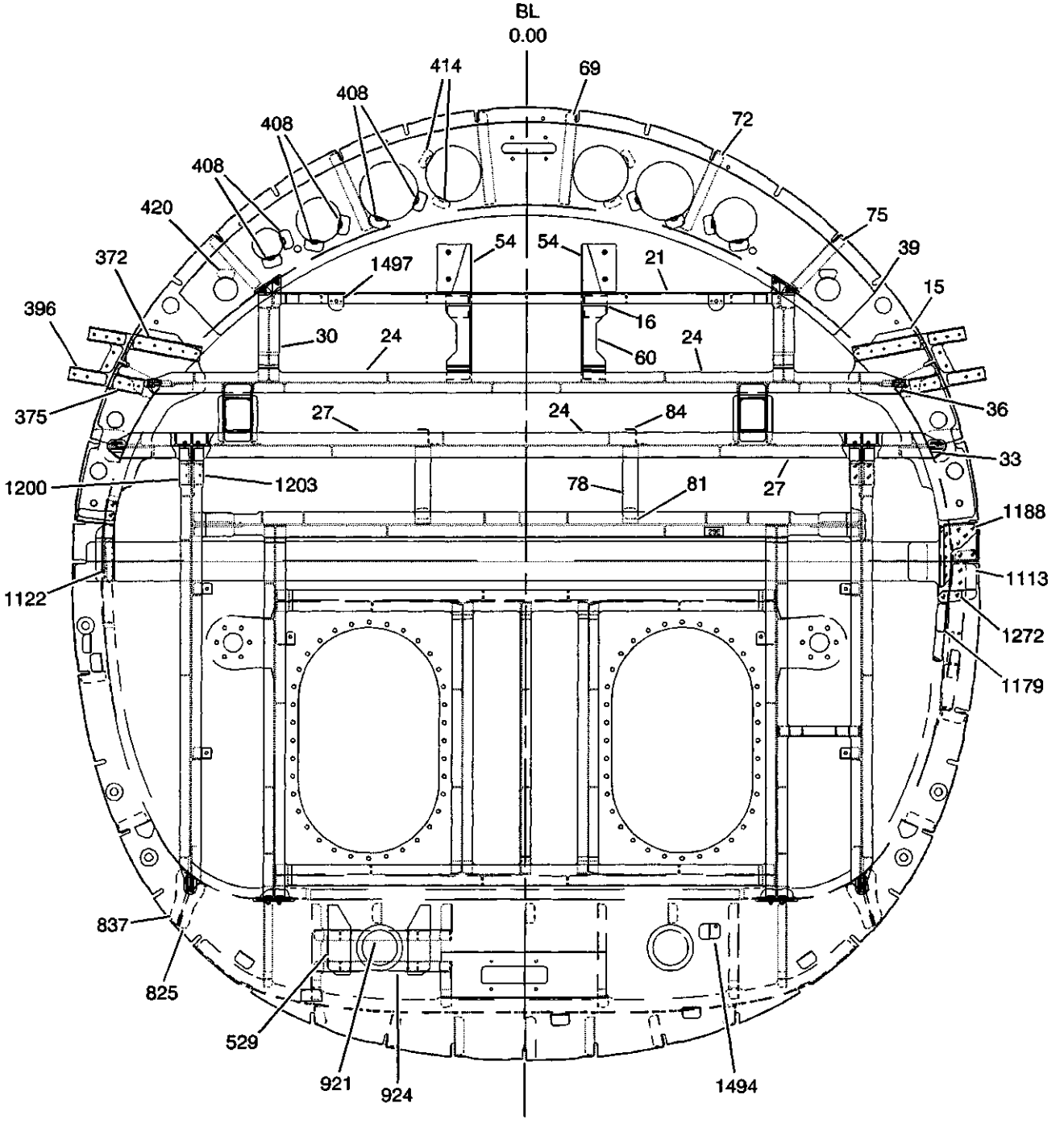

(VIEW LOOKING FWD ON CANTED BULKHEAD)

Detail B

S45-533000-001-02

Fuselage Fuel Cell Assembly Repair Index
Figure 1 (Sheet 2 of 24)

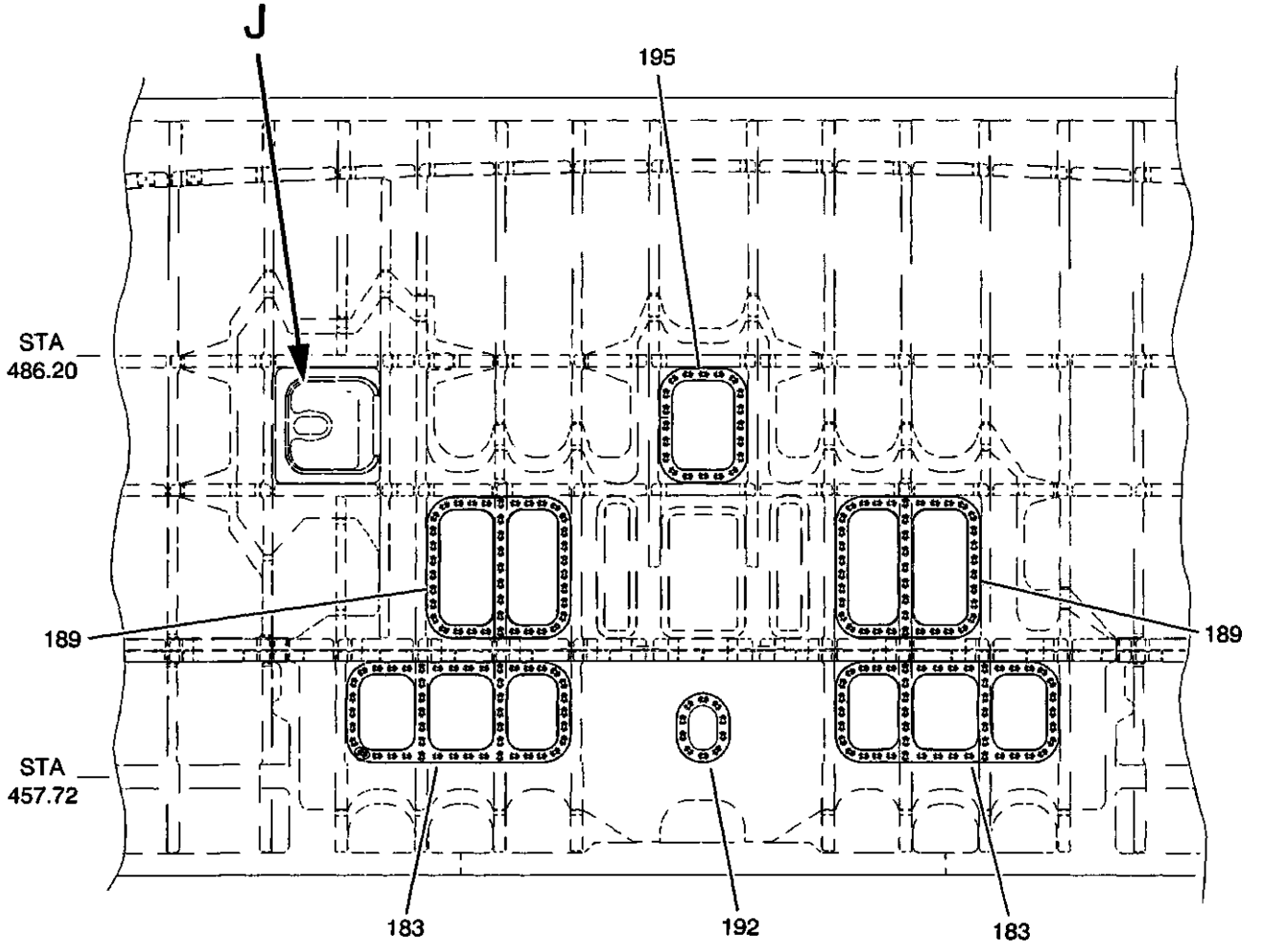

(VIEW LOOKING DOWN)

Detail C

S45-533000-001-03

Fuselage Fuel Cell Assembly Repair Index
Figure 1 (Sheet 3 of 24)

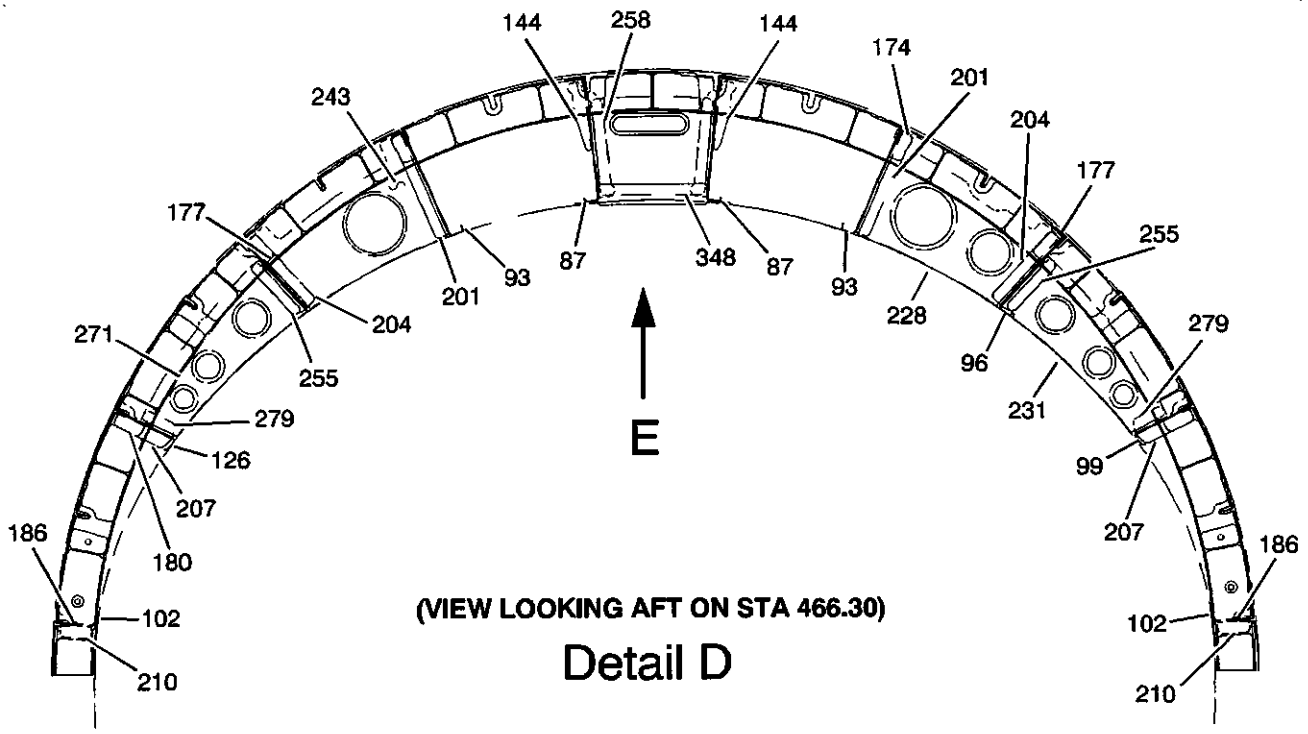

(VIEW LOOKING AFT ON STA 466.30)

Detail D

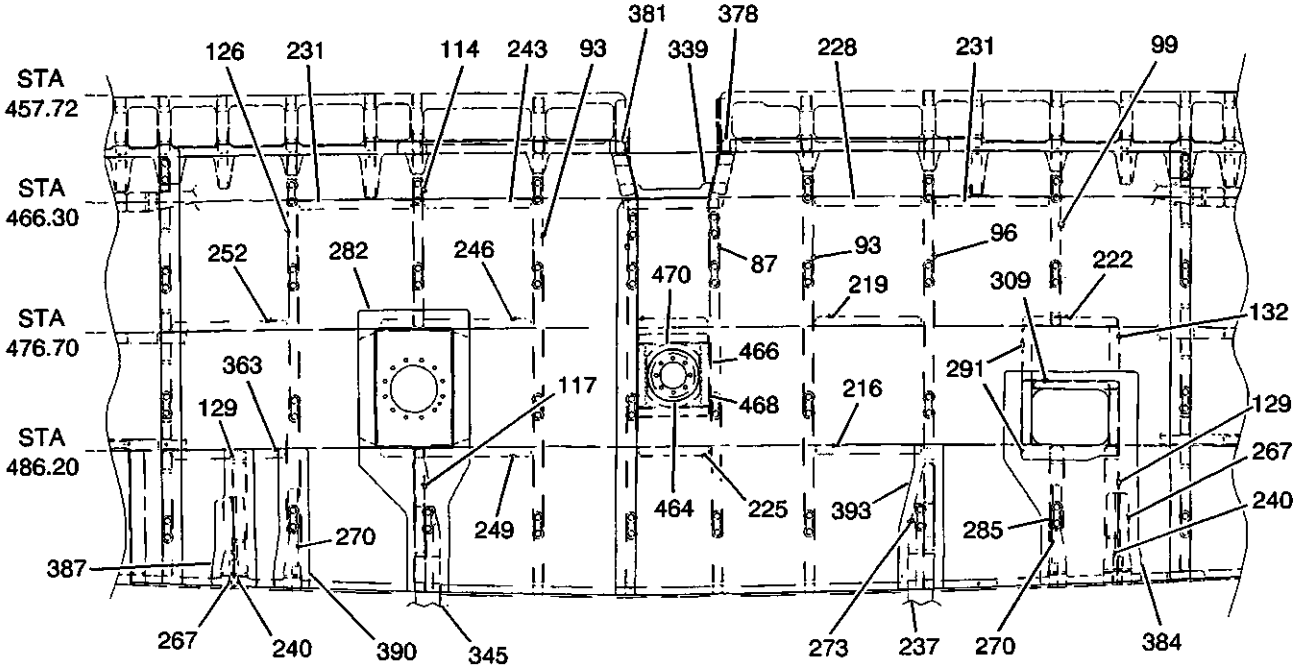

(VIEW LOOKING UP)

Detail E

S45-533000-001-04

Fuselage Fuel Cell Assembly Repair Index
Figure 1 (Sheet 4 of 24)

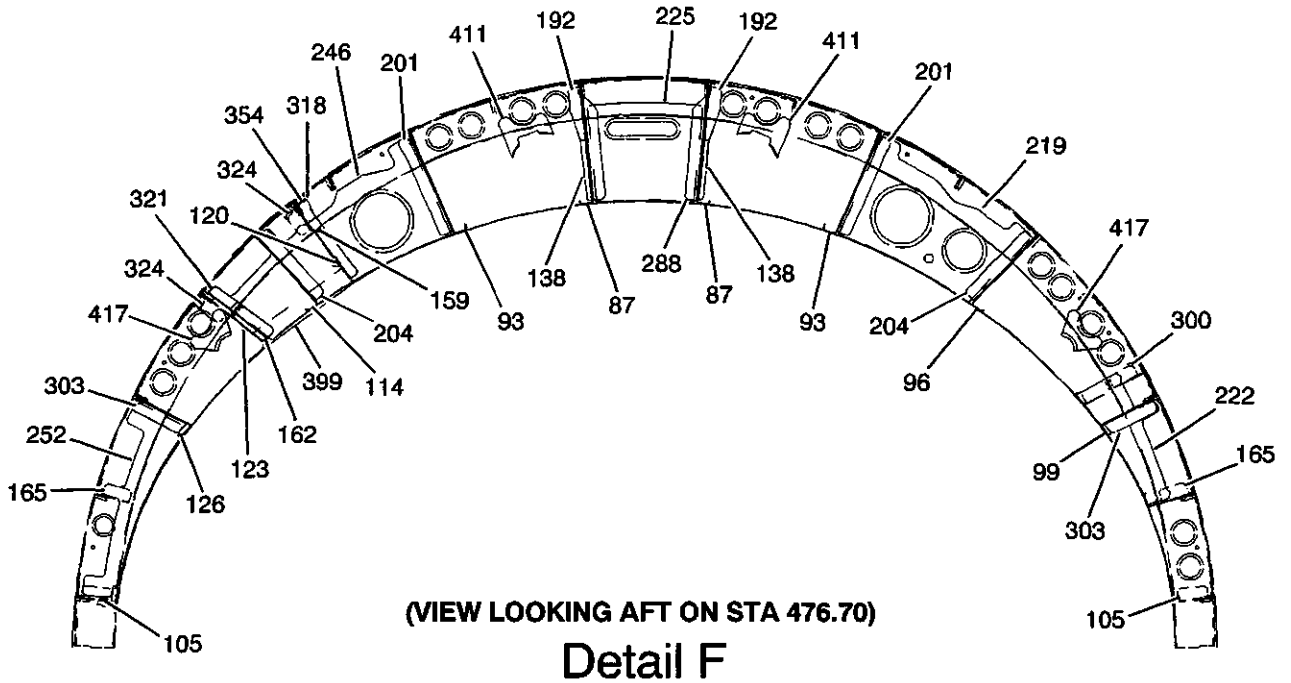

(VIEW LOOKING AFT ON STA 476.70)

Detail F

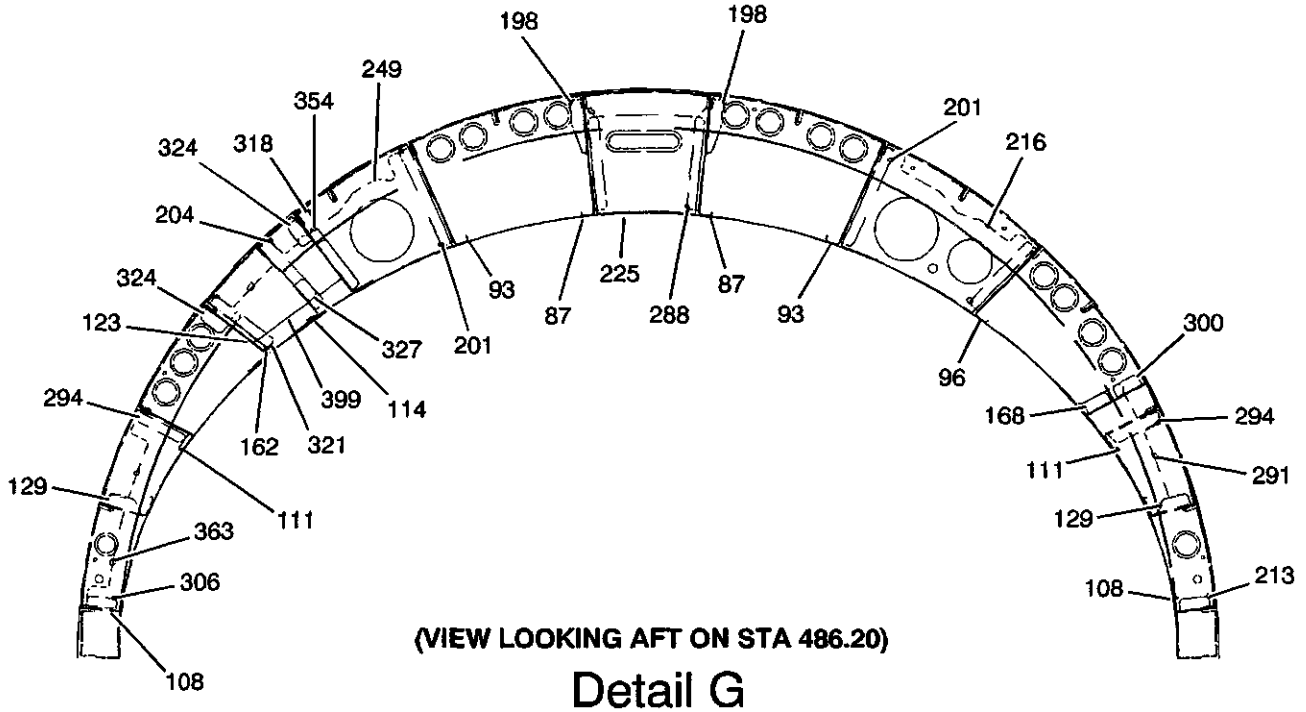

(VIEW LOOKING AFT ON STA 486.20)

Detail G

S45-533000-001-05

Fuselage Fuel Cell Assembly Repair Index
Figure 1 (Sheet 5 of 24)

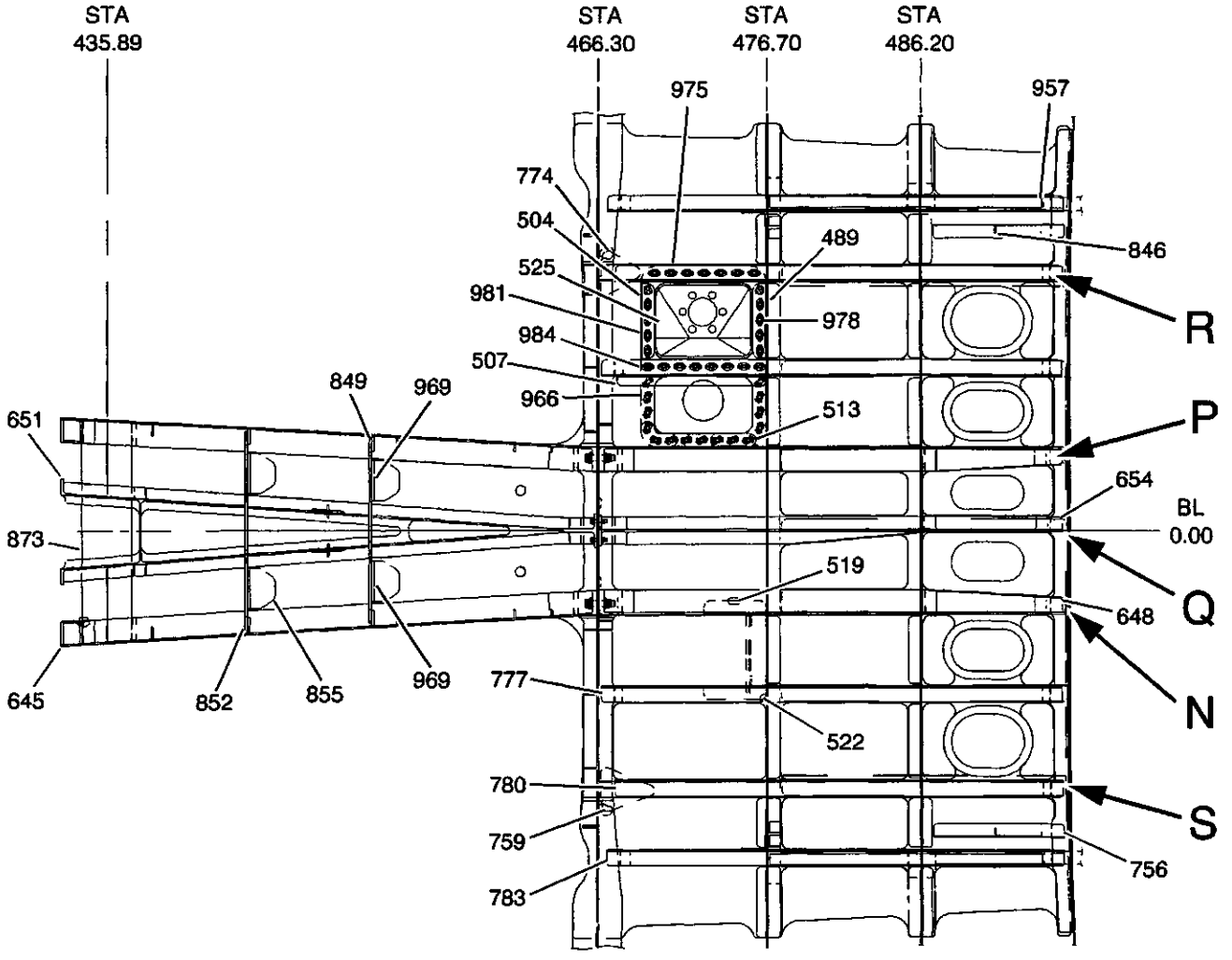

FWD

(VIEW LOOKING DOWN)

Detail H

S45-533000-001-06

Fuselage Fuel Cell Assembly Repair Index
Figure 1 (Sheet 6 of 24)

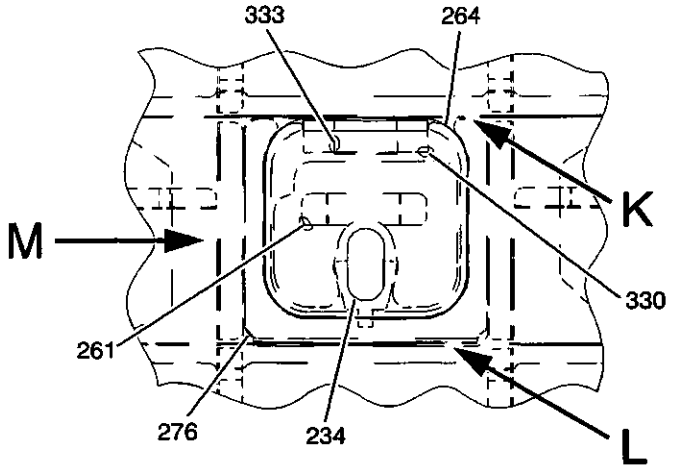

(VIEW LOOKING INBOARD RH SIDE)

Detail J

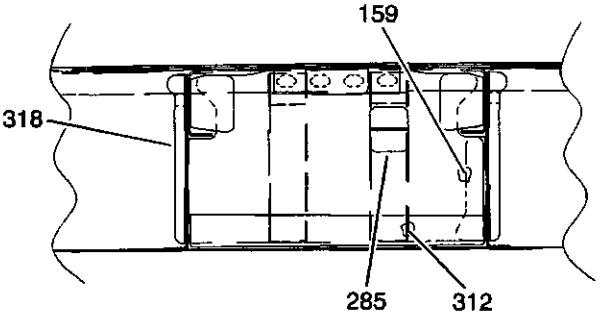

(VIEW LOOKING UP)

Detail K

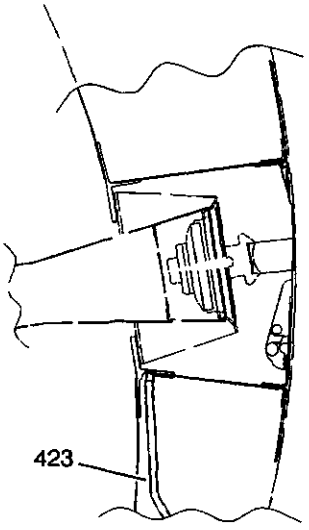

(VIEW LOOKING FWD)

Detail M

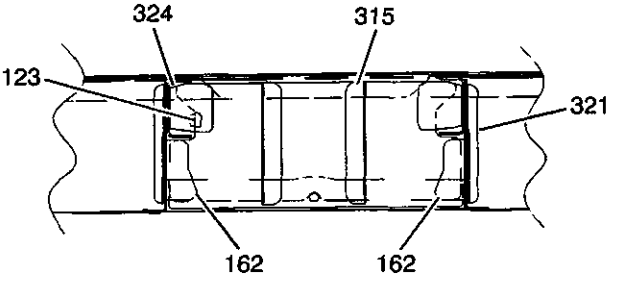

(VIEW LOOKING UP)

Detail L

S45-533000-001-07

Fuselage Fuel Cell Assembly Repair Index
Figure 1 (Sheet 7 of 24)

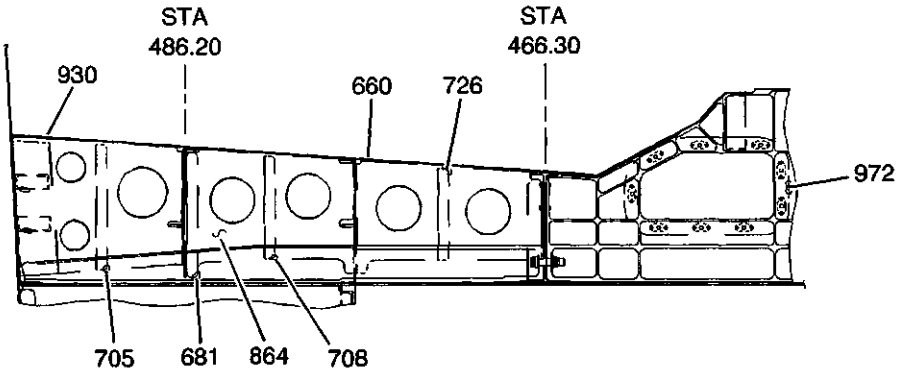

(VIEW LOOKING OUTBD LH SIDE) FWD

Detail N

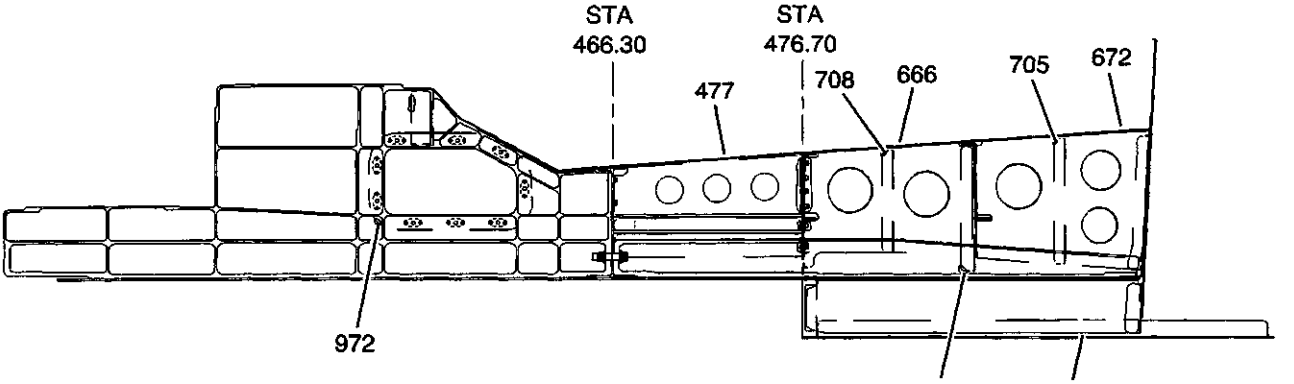

(VIEW LOOKING OUTBD RH SIDE)

FWD

Detail P

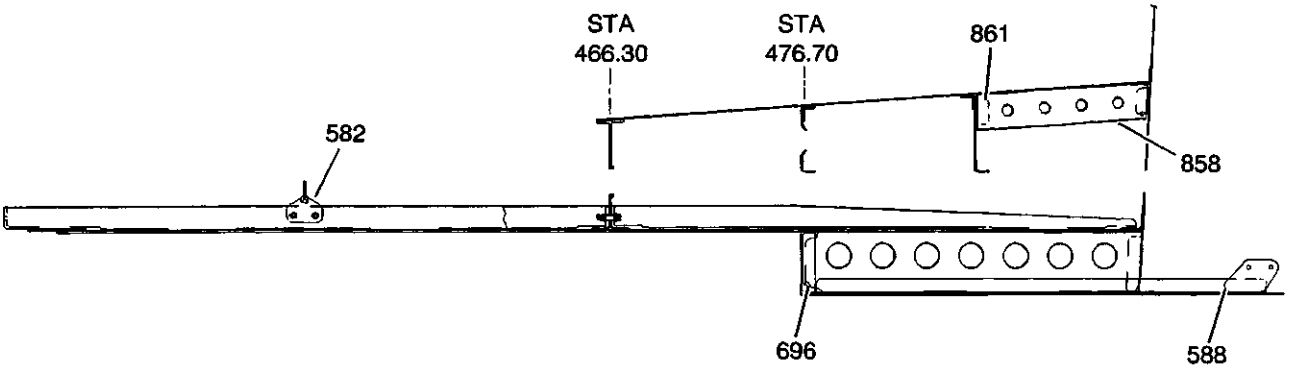

FWD (VIEW LOOKING RIGHT BL 0.00)

Detail Q

S45-533000-001-08

Fuselage Fuel Cell Assembly Repair Index
Figure 1 (Sheet 8 of 24)

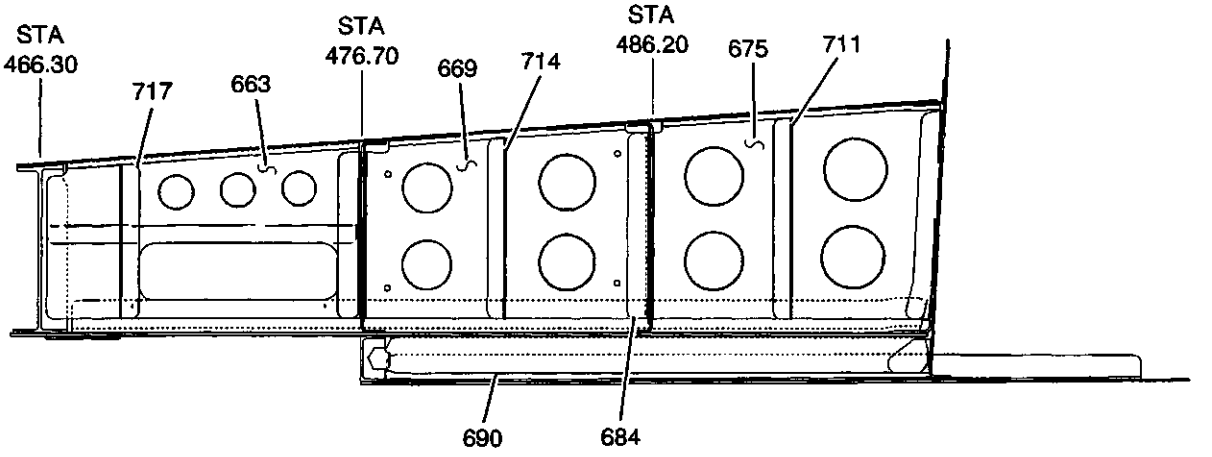

FWD

(VIEW LOOKING OUTBD RH SIDE)

Detail R

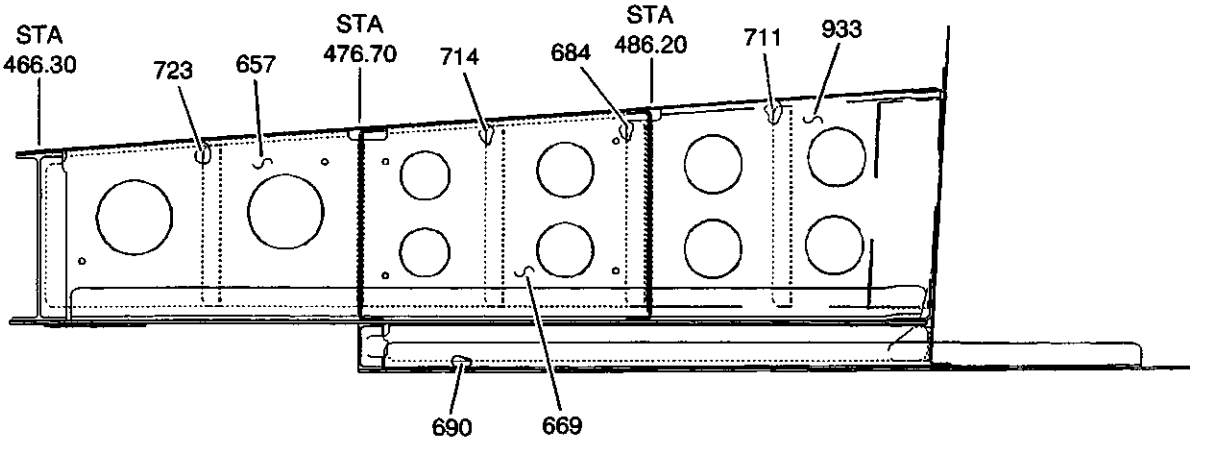

FWD

(VIEW LOOKING INBD LH SIDE)

Detail S

S45-533000-001-09

Fuselage Fuel Cell Assembly Repair Index
Figure 1 (Sheet 9 of 24)

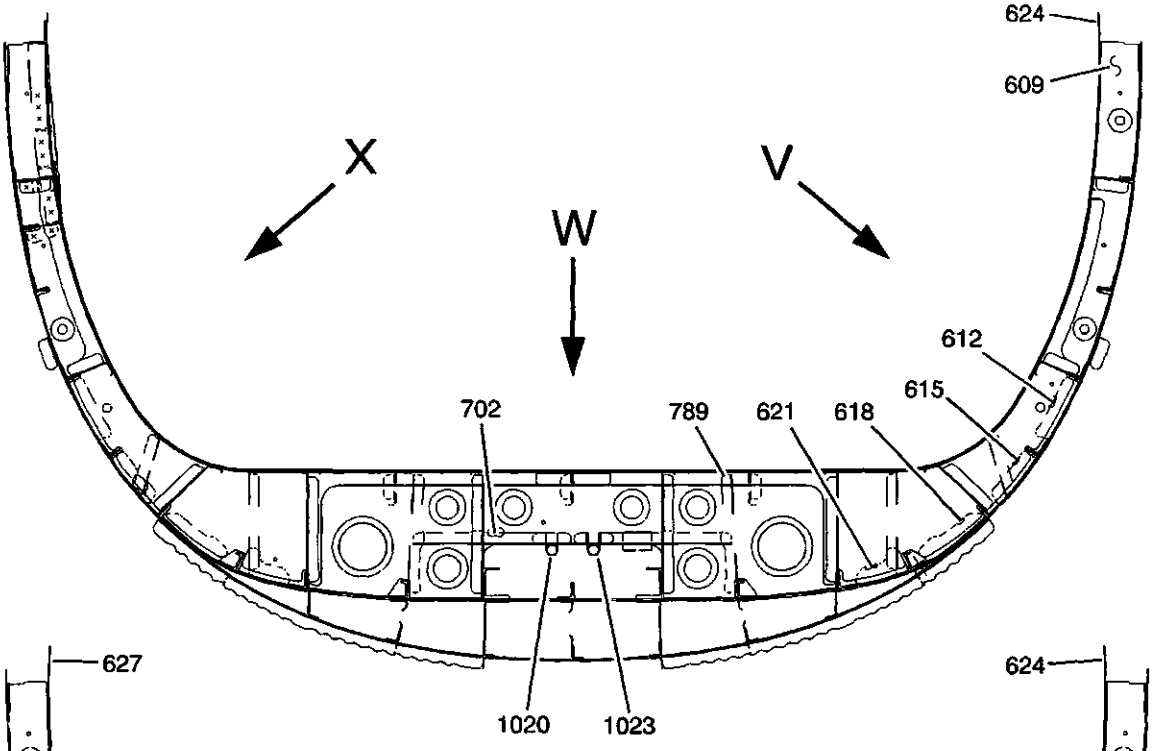

(VIEW LOOKING AFT ON STA 486.20)

Detail T

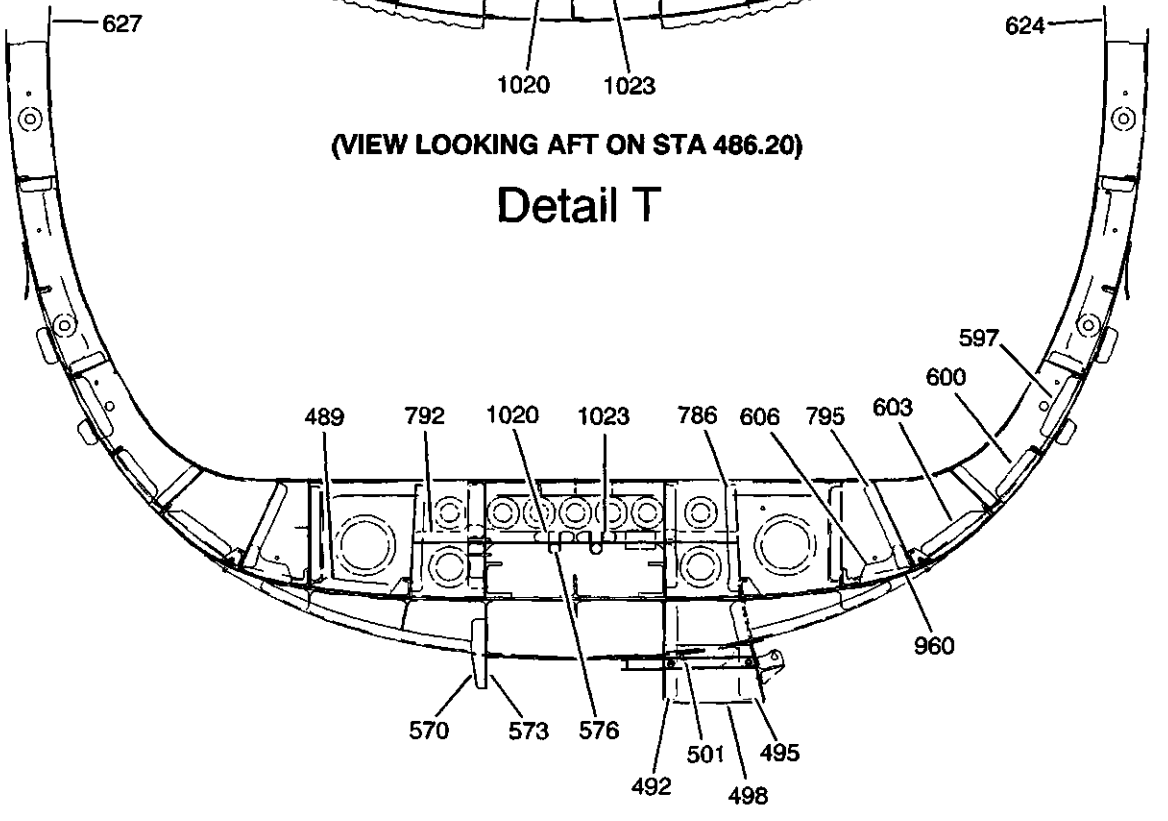

(VIEW LOOKING AFT ON STA 476.70)

Detail U

S45-533000-001-10

Fuselage Fuel Cell Assembly Repair Index
Figure 1 (Sheet 10 of 24)

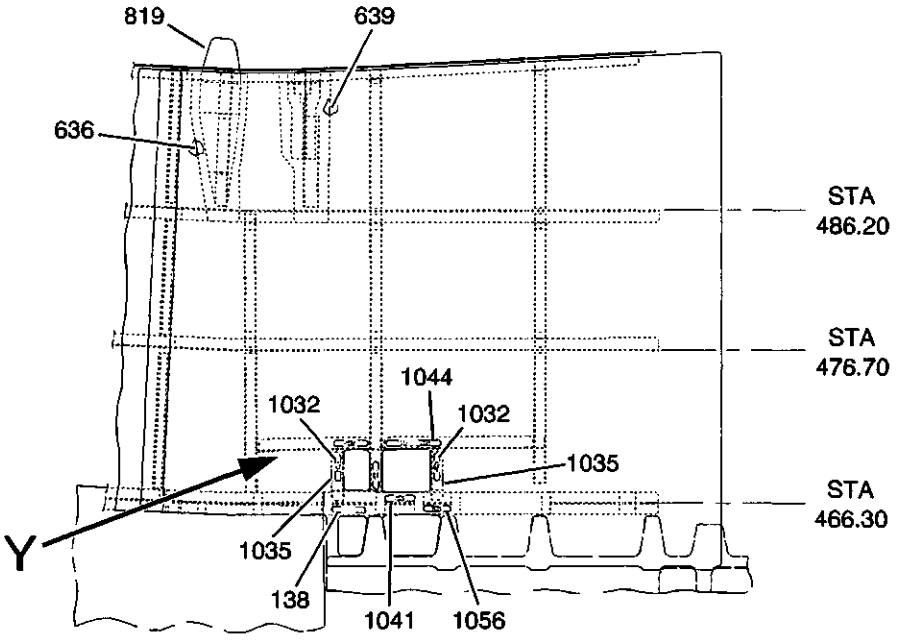

FWD

(VIEW LOOKING OUTBD)

Detail V

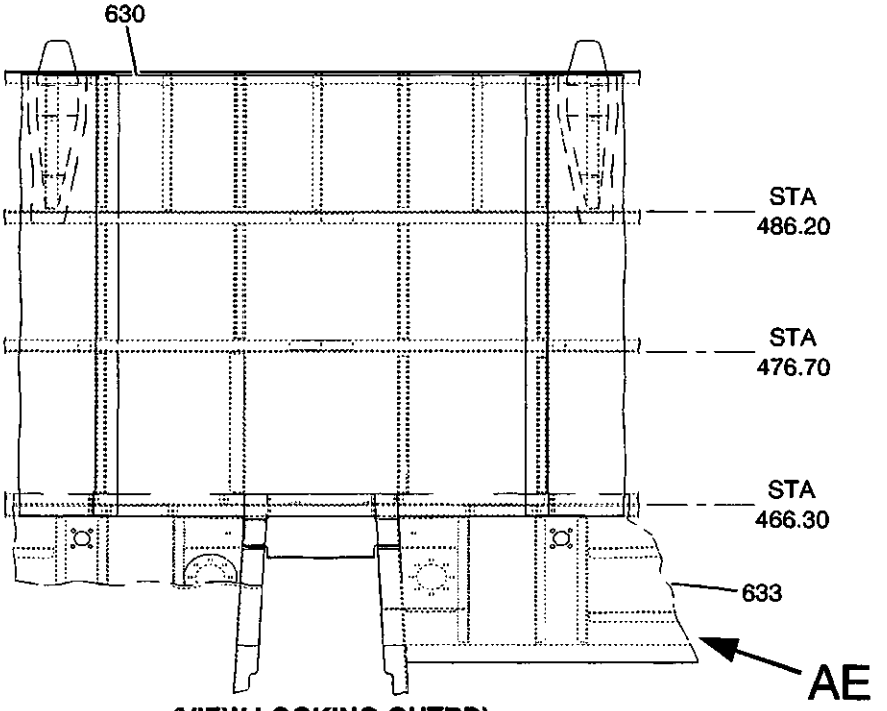

FWD

(VIEW LOOKING OUTBD)

Detail W

S45-533000-001-11

Fuselage Fuel Cell Assembly Repair Index
Figure 1 (Sheet 11 of 24)

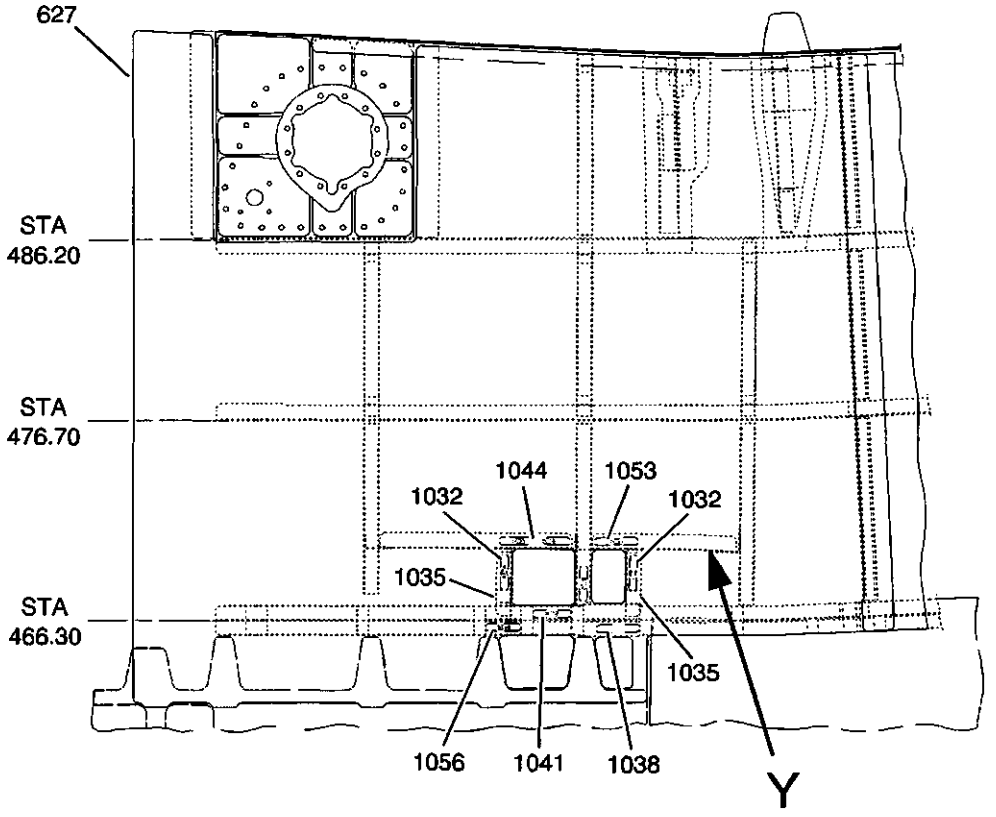

FWD

(VIEW LOOKING OUTBD)

Detail X

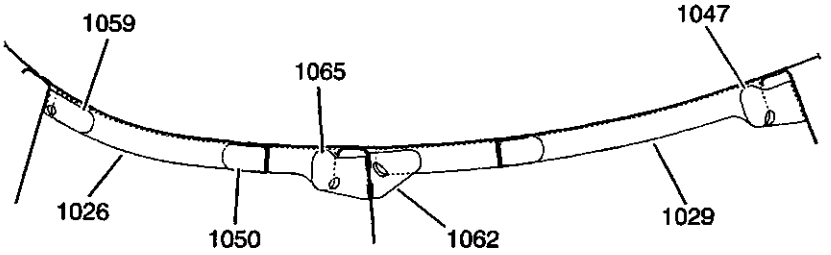

(VIEW LOOKING AFT)

Detail Y

S45-533000-001-12

Fuselage Fuel Cell Assembly Repair Index
Figure 1 (Sheet 12 of 24)

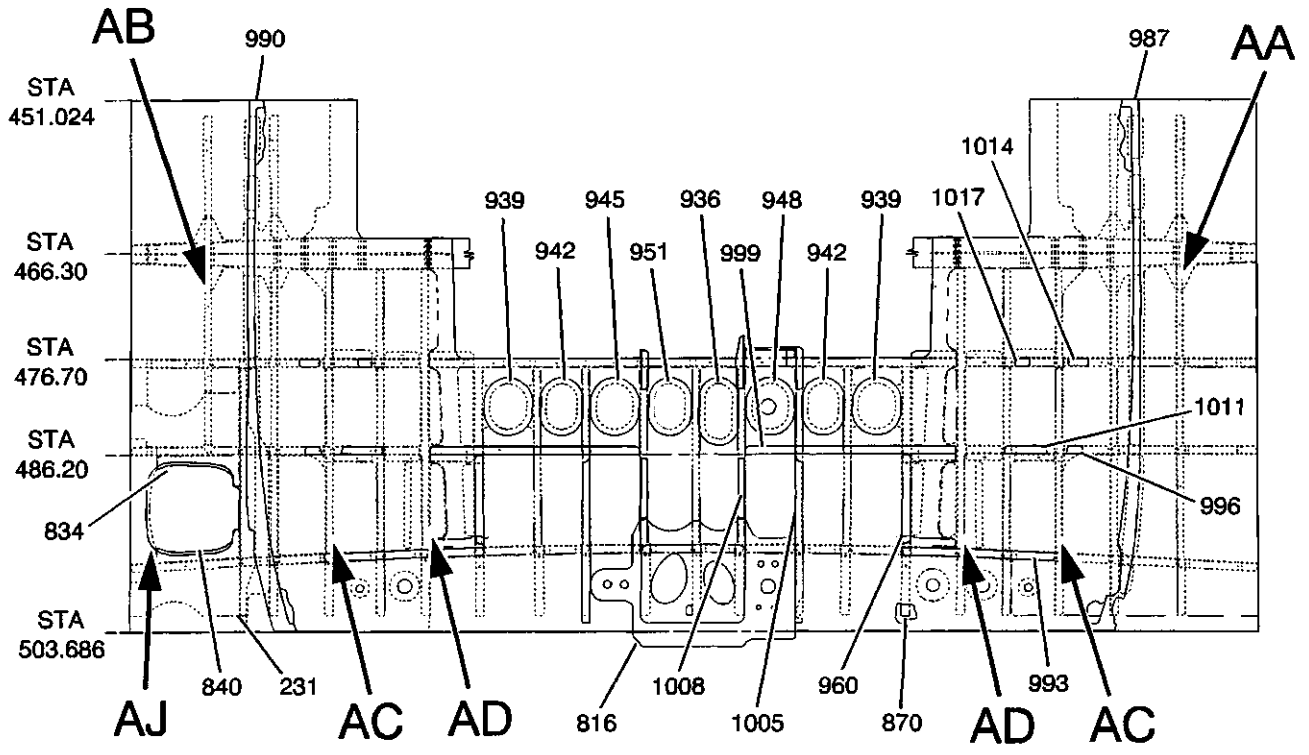

(VIEW LOOKING UP)

Detail Z

FWD

S45-533000-001-13

Fuselage Fuel Cell Assembly Repair Index
Figure 1 (Sheet 13 of 24)

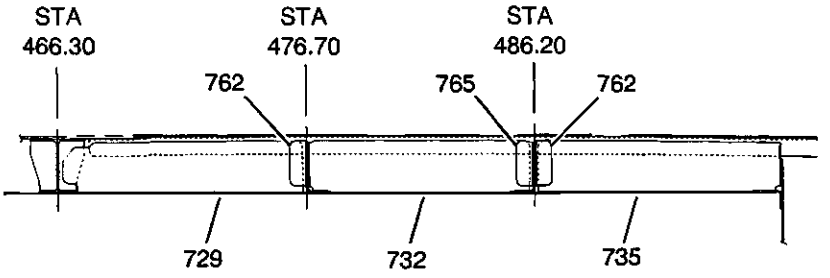

FWD

(VIEW LOOKING UP ON STGR 11 LH)

Detail AA

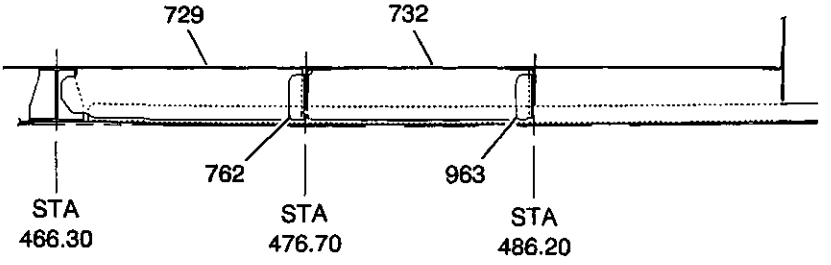

FWD

(VIEW LOOKING UP ON STGR 11 RH)

Detail AB

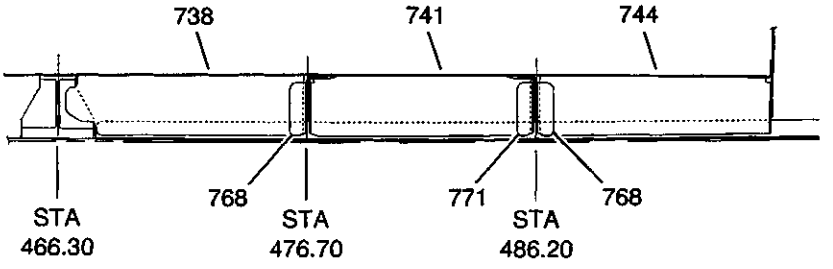

FWD

(VIEW LOOKING DOWN ON STGR 13)

Detail AC

S45-533000-001-14

Fuselage Fuel Cell Assembly Repair Index
Figure 1 (Sheet 14 of 24)

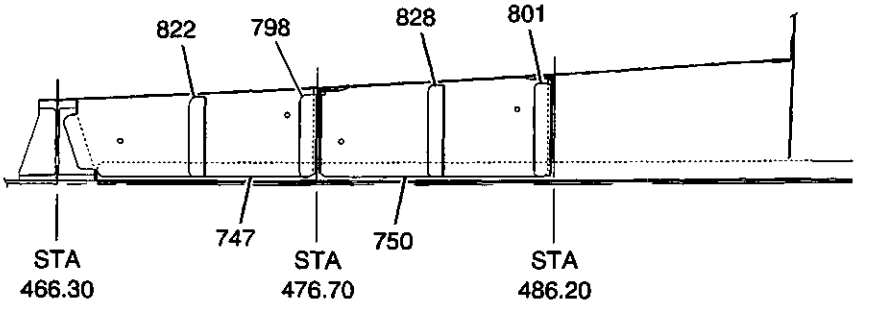

(VIEW LOOKING INBD ON STGR 15)

FWD

Detail AD

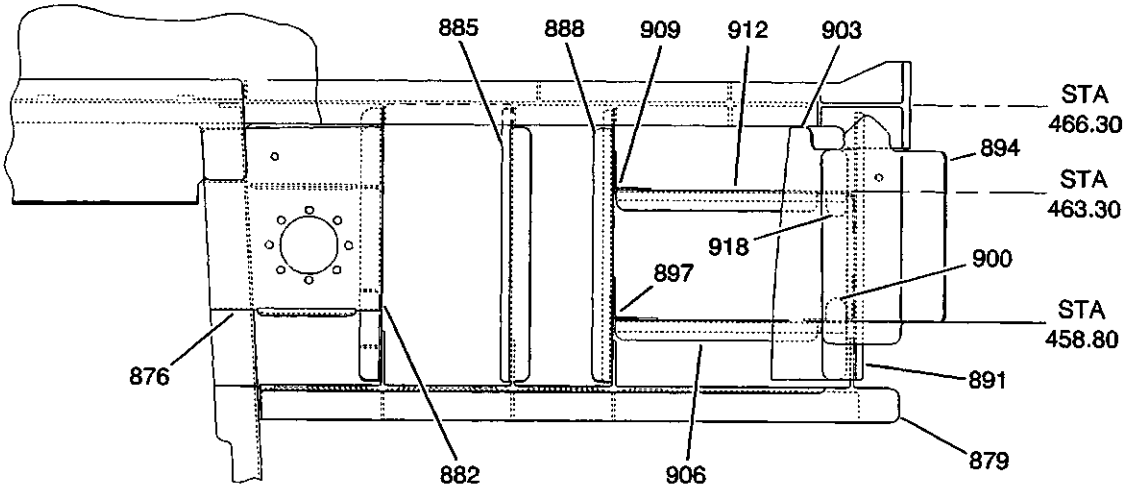

FWD

(VIEW LOOKING OUTBD)

Detail AE

S45-533000-001-15

Fuselage Fuel Cell Assembly Repair Index
Figure 1 (Sheet 15 of 24)

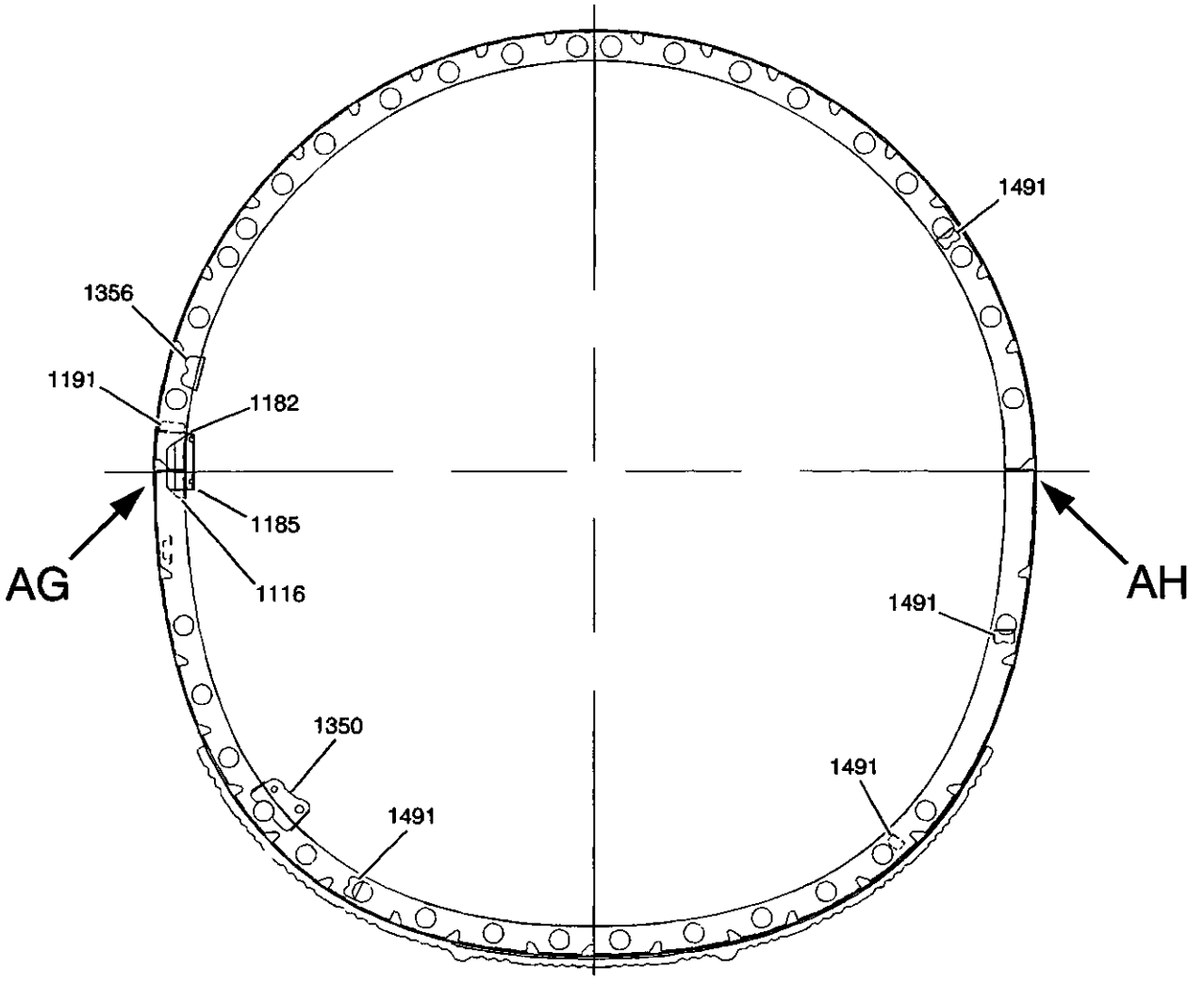

(VIEW LOOKING FWD ON STA 503.686)

Detail AF

S45-533000-001-16

Fuselage Fuel Cell Assembly Repair Index
Figure 1 (Sheet 16 of 24)

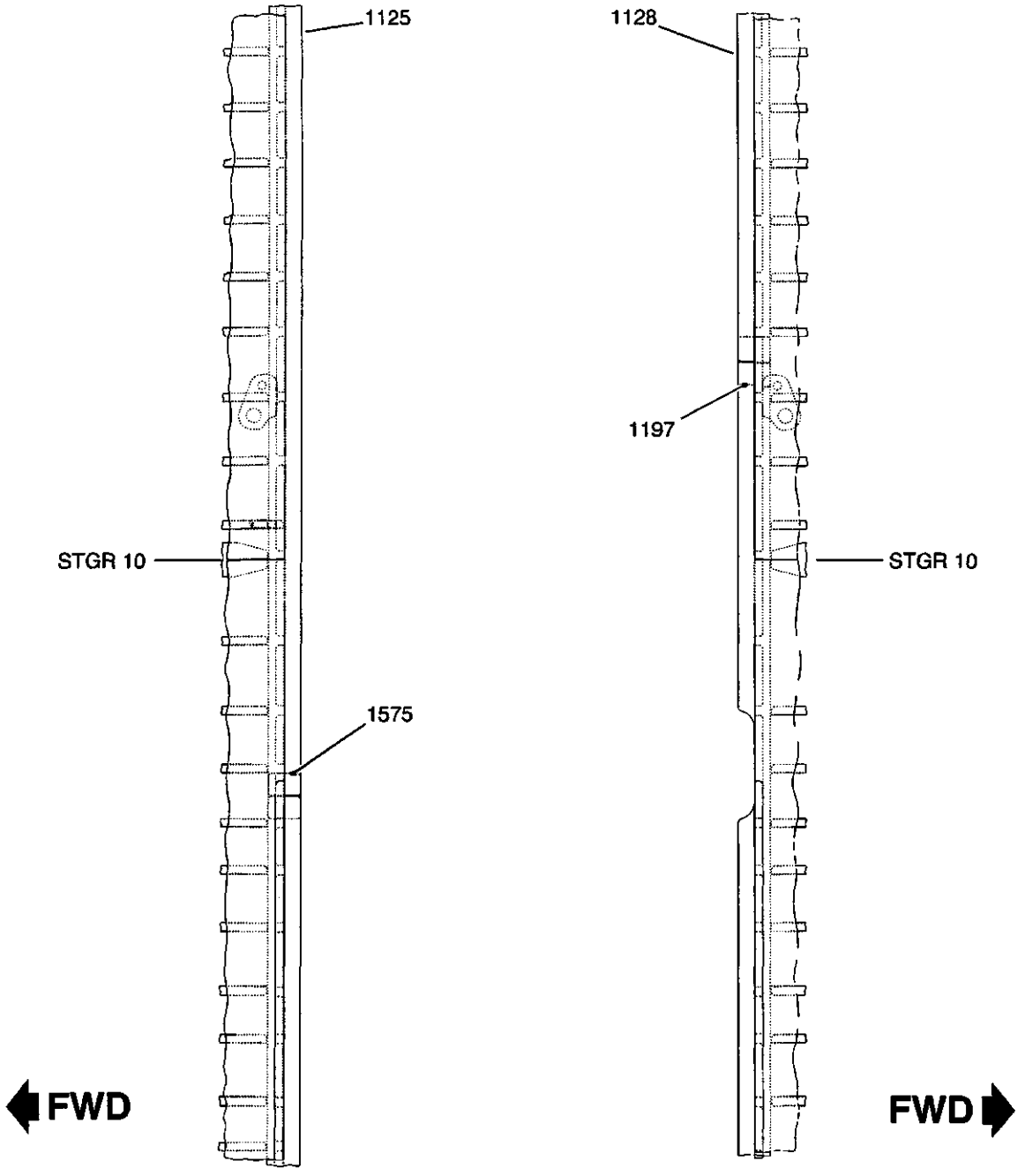

(VIEW LOOKING INBD)
Detail AG

(VIEW LOOKING INBD)
Detail AH

S45-533000-001-17

Fuselage Fuel Cell Assembly Repair Index
Figure 1 (Sheet 17 of 24)

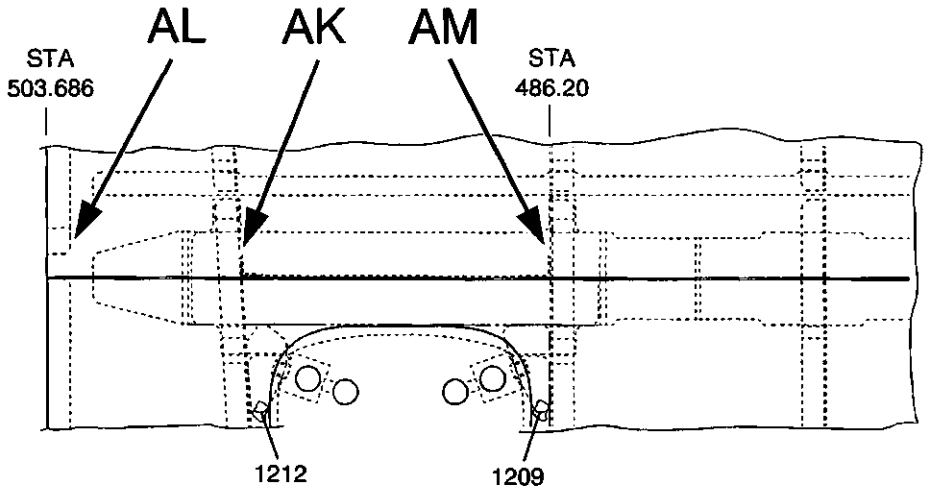

(VIEW LOOKING INBD RH SIDE)

Detail AJ

FWD

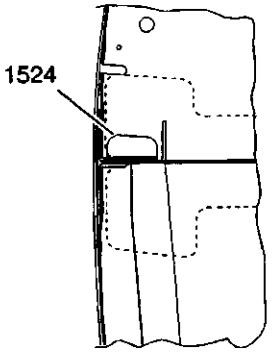

(VIEW LOOKING AFT)

Detail AK

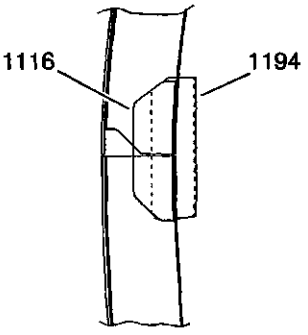

(VIEW LOOKING AFT)

Detail AL

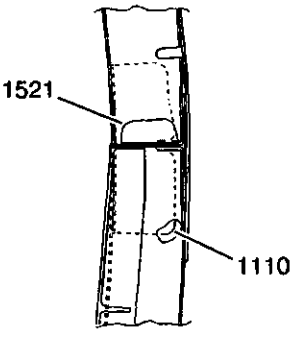

(VIEW LOOKING FWD)

Detail AM

S45-533000-001-18

Fuselage Fuel Cell Assembly Repair Index
Figure 1 (Sheet 18 of 24)

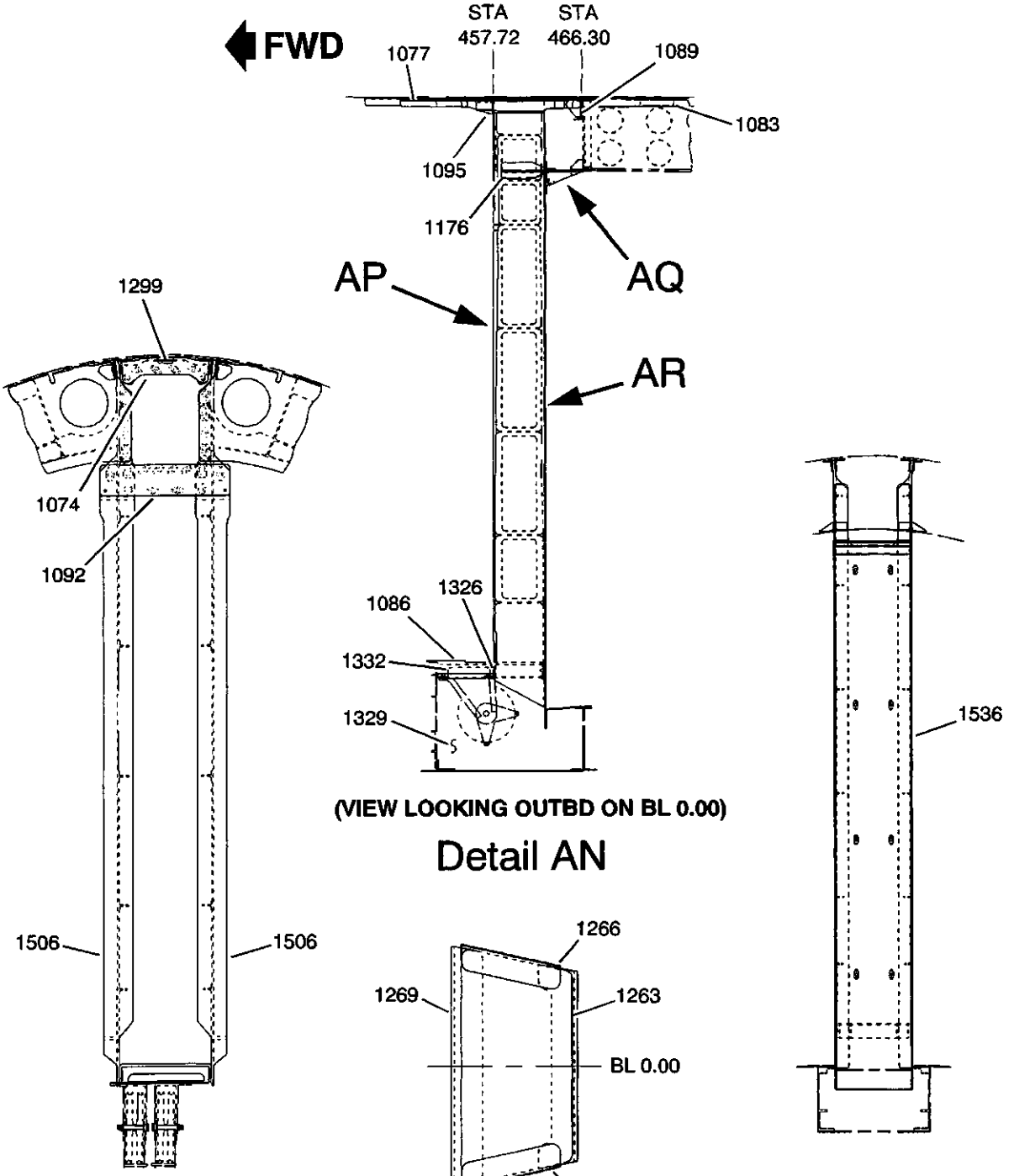

(VIEW LOOKING OUTBD ON BL 0.00)

Detail AN

(VIEW LOOKING AFT)

Detail AP

(VIEW LOOKING UP)

Detail AQ

(VIEW LOOKING FWD)

Detail AR

S45-533000-001-19

Fuselage Fuel Cell Assembly Repair Index
Figure 1 (Sheet 19 of 24)

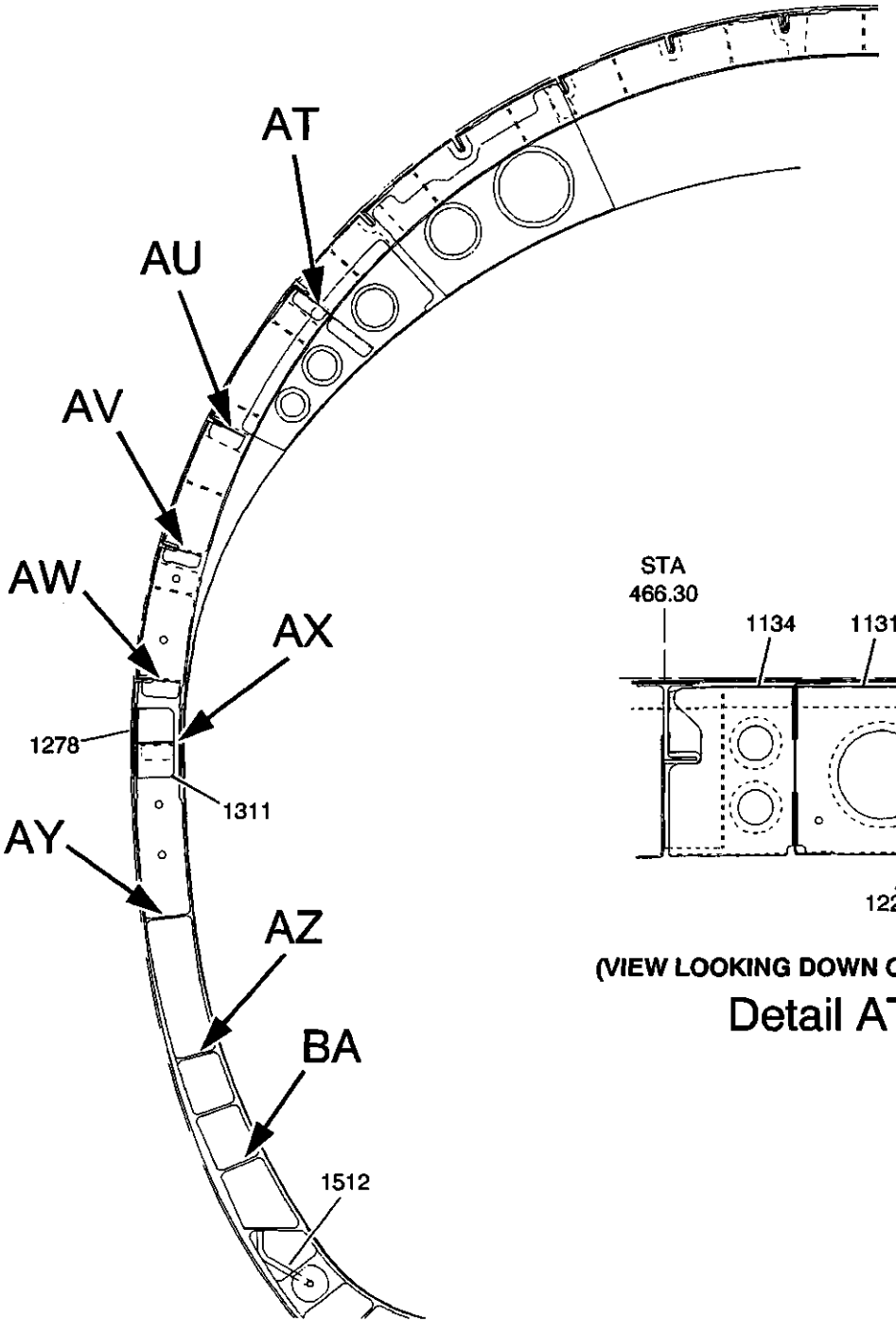

(VIEW LOOKING FWD ON STA 466.30)

Detail AS

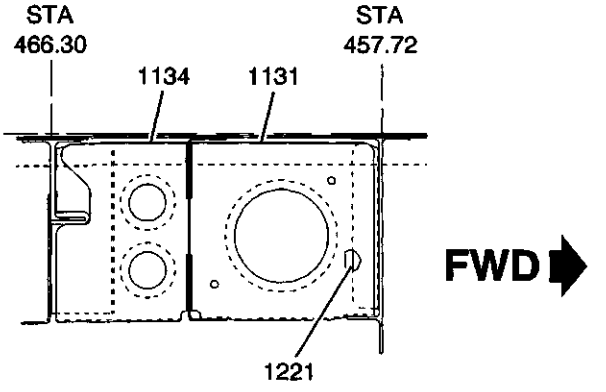

(VIEW LOOKING DOWN ON STGR 6)

Detail AT

S45-533000-001-20

Fuselage Fuel Cell Assembly Repair Index
Figure 1 (Sheet 20 of 24)

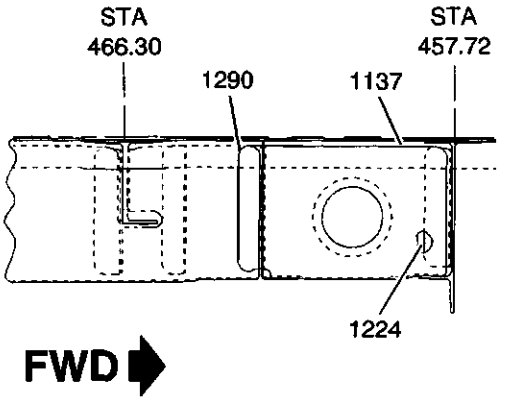

(VIEW LOOKING DOWN ON STGR 7)

Detail AU

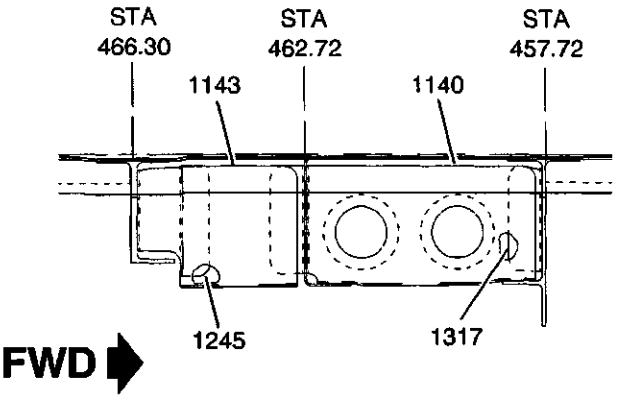

(VIEW LOOKING DOWN ON STGR 8)

Detail AV

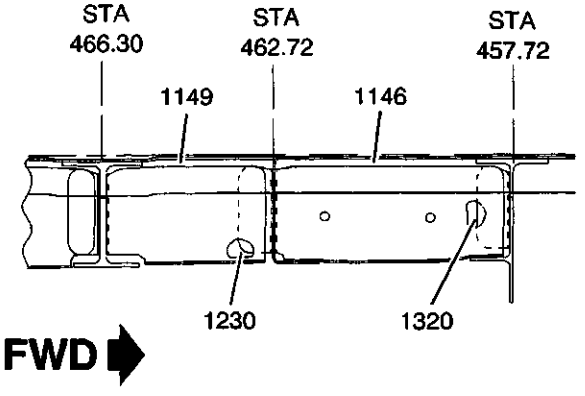

(VIEW LOOKING DOWN ON STGR 9)

Detail AW

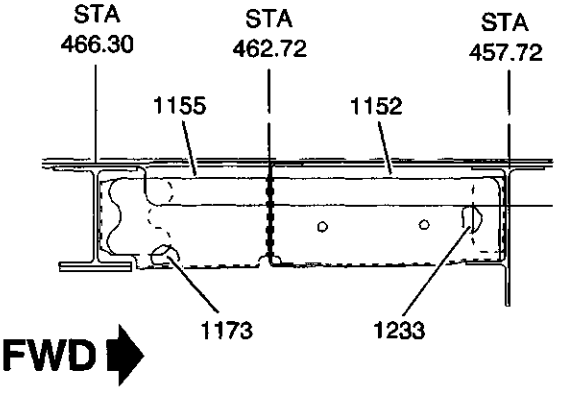

(VIEW LOOKING DOWN ON STGR 10)

Detail AX

S45-533000-001-21

Fuselage Fuel Cell Assembly Repair Index
Figure 1 (Sheet 21 of 24)

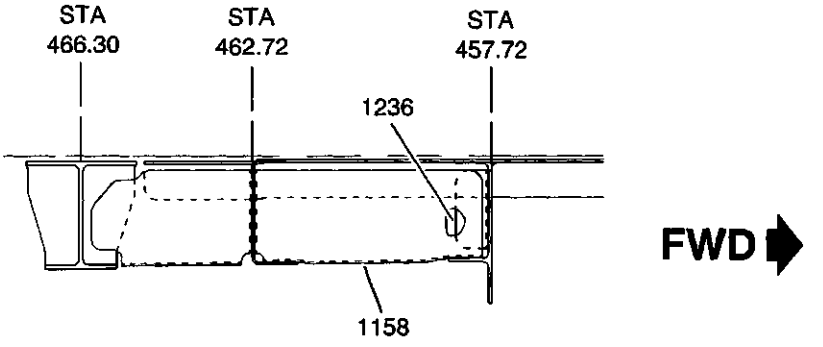

(VIEW LOOKING DOWN ON STGR 11)

Detail AY

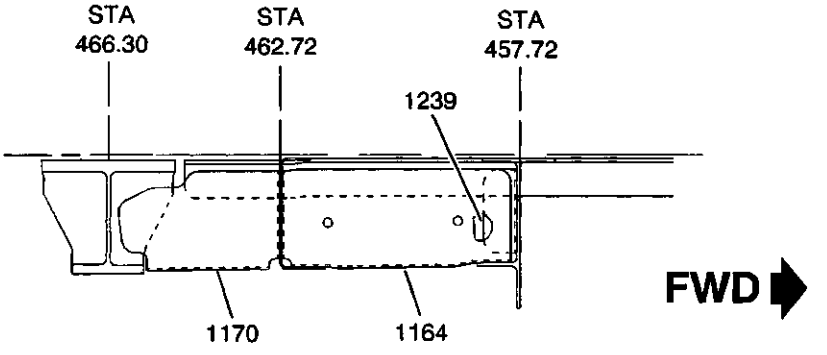

(VIEW LOOKING DOWN ON STGR 12)

Detail AZ

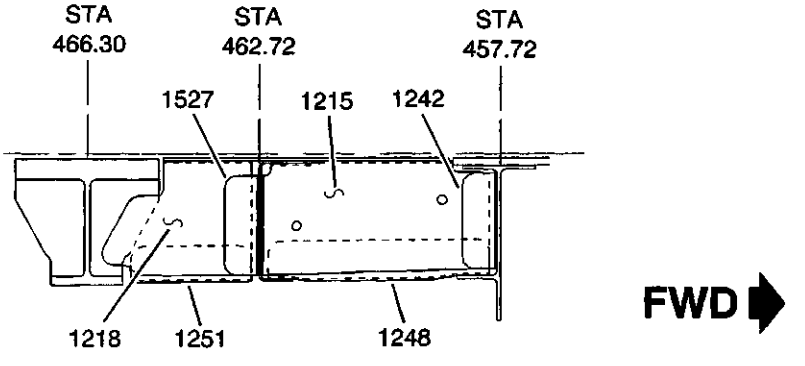

(VIEW LOOKING DOWN ON STGR 13)

Detail BA

S45-533000-001-22

Fuselage Fuel Cell Assembly Repair Index
Figure 1 (Sheet 22 of 24)

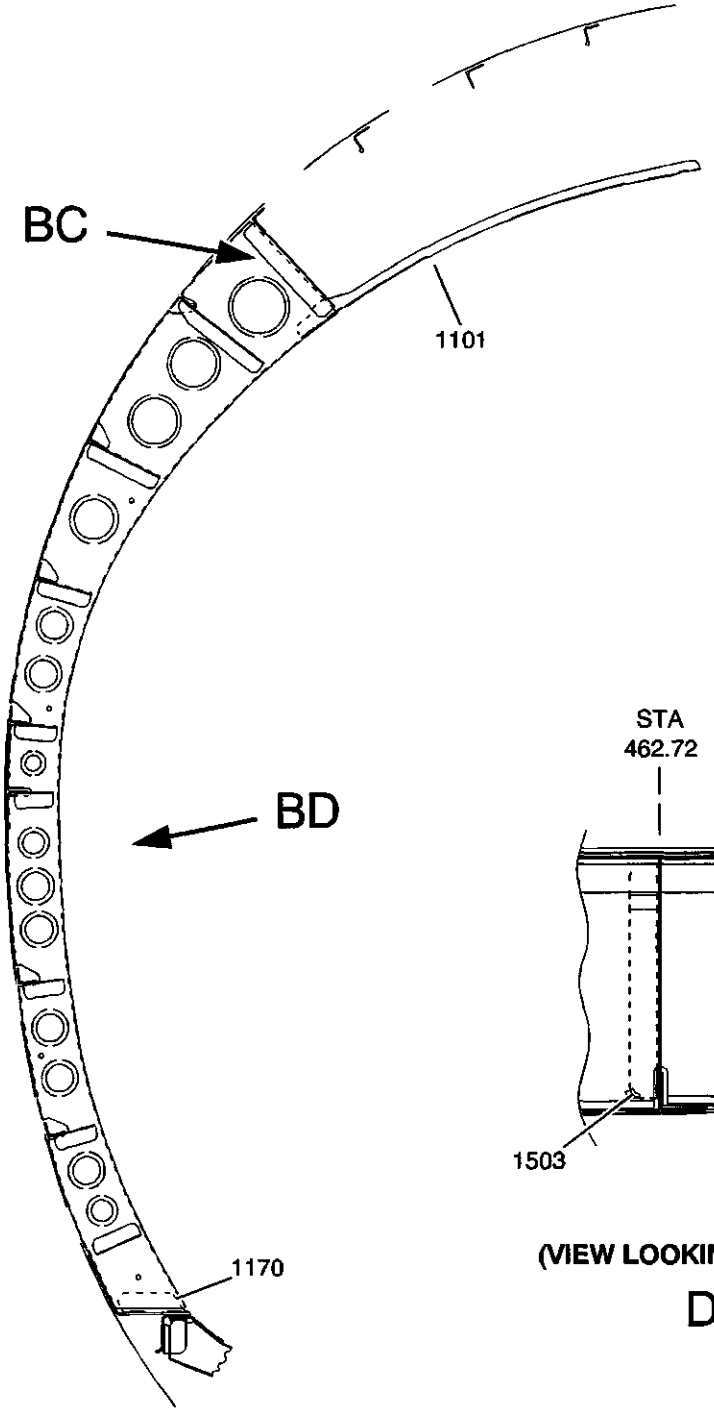

(VIEW LOOKING FWD ON STA 462.72)

Detail BB

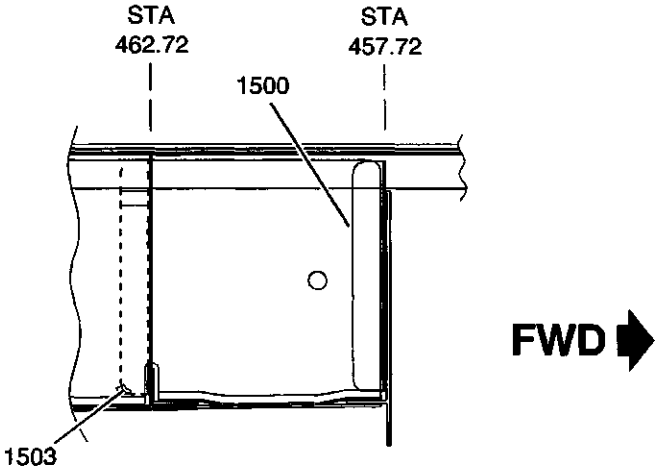

(VIEW LOOKING DOWN ON STGR 5)

Detail BC

S45-533000-001-23

Fuselage Fuel Cell Assembly Repair Index
Figure 1 (Sheet 23 of 24)

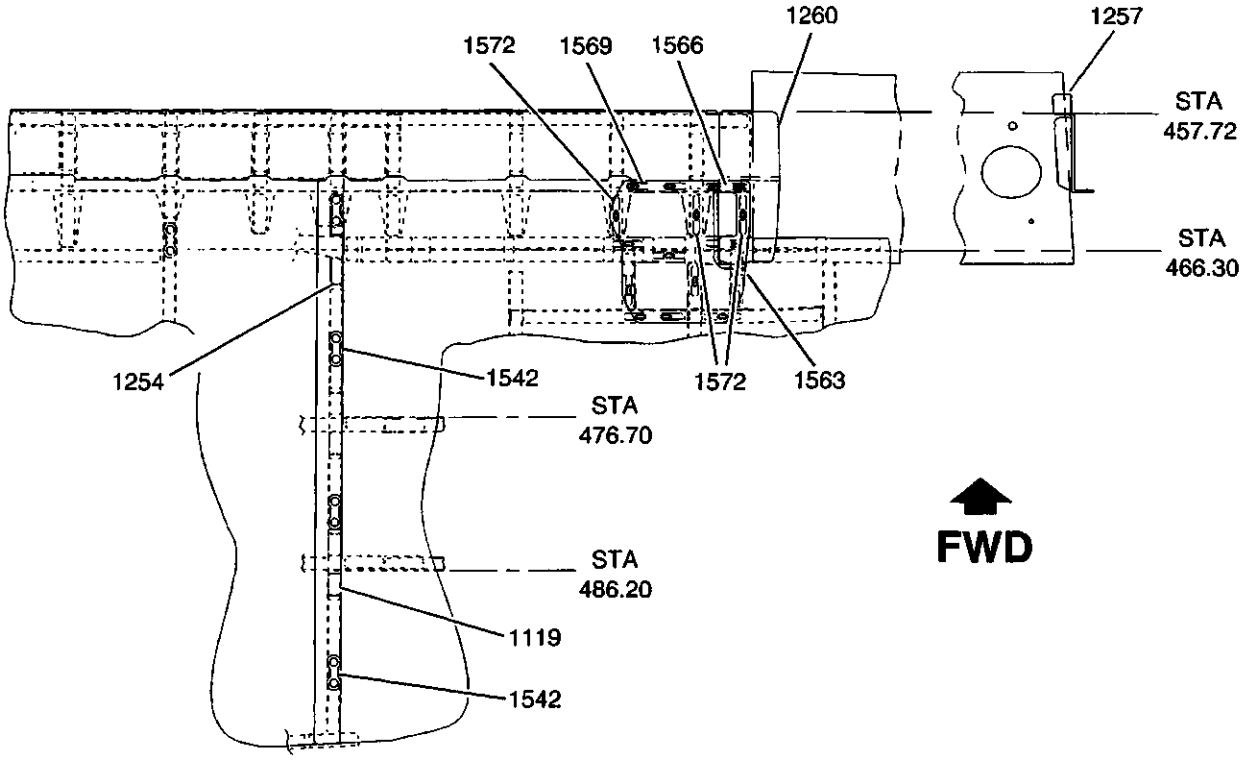

(VIEW LOOKING OUTBD)

Detail BD

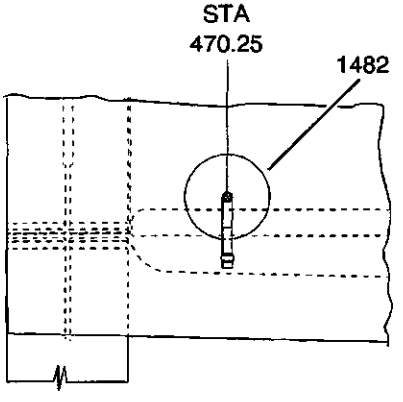

(VIEW LOOKING INBD, LH SHOWN; RH OPPOSITE)

Detail BE

S45-533000-001-24

Fuselage Fuel Cell Assembly Repair Index
Figure 1 (Sheet 24 of 24)

ITEM NO.	DWG. NO.	DESCRIPTION	EFF CODE	MATERIAL	GAGE	FINISH CODE	REPAIR FIG. NO.
	4553004000	Fuel Cell Assembly • Refer to 53-30-10 for Fuselage Fuel Cell Frames • Refer to 53-30-20 for Fuselage Fuel Cell Stringers • Refer to 53-20-40 for Fuselage Fuel Cell Skins	1	-	-	-	-
-	4553004001	• Top Panel Assy., Fuel Cell	1	-	-	-	-
-	4553004003	• • Top Panel, Fuel Cell	1	-	-	-	-
-	4553004006	• • • Top Panel, Assy.	1	-	-	-	-
-	4553403750	• • • Bulkhead Assy, Upper	1	-	-	-	-
15	4553403717	• • • • Plate, Reinforcement (2 ea.)	1	2024-T3 Clad	0.050	F3-8	Replace
18	4553403752	• • • • Angle, Skin Liner	1	2024-T42 Clad	0.050	F3-8	Replace
21	4553403754	• • • • Channel Member	1	7475-T7351 Plate	1.50	F3-8	Replace
24	4553403755	• • • • Beam WL 44.83	1	7475-T7351 Plate	2.750	F3-8	Replace
27	4553403756	• • • • Beam, Stringer No. 8	1	7475-T7351 Plate	2.000	F3-8	Replace
30	4553403759	• • • • Beam BL18.50 (2 ea.)	1	7475-T7351 Plate	2.000	F3-8	Replace
33	4553403761	• • • • Angle WL 40.40 (2 ea.)	1	7475-T7351 Plate	1.000	F3-8	Replace
36	4553403762	• • • • Angle WL 44.89 (2 ea.)	1	7475-T7351 Plate	0.760	F3-8	Replace
39	4553408134	• • • • Doubler, Top	1	2024-T42 Clad	0.050	F3-8	Replace
-	4529102129 1	• • • • Support Bracket (4 ea.)	1	2024-T42 Clad	0.050	F3-8	Replace
45	4529102131	• • • • Support Channel (2 ea.)	1	2024-T3 Clad	0.050	F3-8	Replace
48	4529102132	• • • • Support Channel (2 ea.)	1	2024-T3 Clad	0.050	F3-8	Replace
51	4529102140	• • • • Plate, Upper (2 ea.)	1	2024-T3 Clad	0.050	F3-8	Replace
54	4529102141	• • • • Plate, Lower (2 ea.)	1	2024-T3 Clad	0.050	F3-8	Replace
57	4529102142	• • • • Support Bracket (2 ea.)	1	7475-T7351 Plate	1.50	F3-8	Replace
60	4529102146	• • • • Support Bracket (2 ea.)	1	7475-T7351 Plate	2.000	F3-8	Replace
-	4529102130	• • • • Diaphragm (2 ea.)	1	7475-T7351 Plate	0.680	F3-8	Replace
66	4529102147	• • • • Intercostal Support (2 ea.)	1	7475-T7351 Plate	1.750	F3-8	Replace
69	4553408272	• • • • Attachment Angle (2 ea.)	1	2024-T42 Clad	0.040	F3-8	Replace
72	4553408273	• • • • Attachment Angle (2 ea.)	1	2024-T42 Clad	0.040	F3-8	Replace
		- Not Illustrated					

Fuselage Fuel Cell Assembly Repair Index
Table 1 (Sheet 1 of 21)

ITEM NO.	DWG. NO.	DESCRIPTION	EFF CODE	MATERIAL	GAGE	FINISH CODE	REPAIR FIG. NO.
75	4553408274	• • • • Attachment Angle (2 ea.)	1	2024-T42 Clad	0.040	F3-8	Replace
78	4529102136	• • • • Bracket	1	2024-T3 Clad	0.040	F3-8	Replace
81	4529102137	• • • • Angle (2 ea.)	1	2024-T3 Clad	0.040	F3-8	Replace
84	4529102138	• • • • Bracket	1	2024-T3 Clad	0.040	F3-8	Replace
87	4553408051 ▷2	• • • Diaphragm, LH & RH Stringer No.1	1	2024-T42 Clad	0.040	F3-8	Replace
-	4553004000V7	• • • • Doubler	2	2024-T42 Clad	0.040	F3-8	Replace
93	4553408052	• • • Diaphragm, LH & RH Stringer No.3	1	2024-T42 Clad	0.040	F3-8	Replace
96	4553408053	• • • Diaphragm, LH Stringer No.5	1	2024-T42 Clad	0.040	F3-8	Replace
99	4553408054	• • • Diaphragm, LH Stringer No7	1	2024-T42 Clad	0.040	F3-8	Replace
102	4553408056	• • • Intercostal, LH & RH Stringer No.9 FS 465 to FS 475	1	2024-T42 Clad	0.040	F3-8	Replace
105	4553408057	• • • Intercostal, LH & RH Stringer No9 FS 475 to FS 486	1	2024-T42 Clad	0.040	F3-8	Replace
108	4553408058	• • • Intercostal, LH & RH Stringer No.9 FS 486 to FS 498	1	2024-T42 Clad	0.040	F3-8	Replace
111	4553408071	• • • Diaphragm, LH Stringer No.7	1	2024-T42 Clad	0.050	F3-8	Replace
114	4553408072	• • • Diaphragm, RH Stringer No.5 FS 456 to FS 476	1	2024-T42 Clad	0.040	F3-8	Replace
117	4553408073	• • • Diaphragm, RH Stringer No.5 FS 486 to FS 498	1	2024-T42 Clad	0.040	F3-8	Replace
120	4553408074	• • • Diaphragm, RH Stringer No.4A FS 476 to FS 486	1	2024-T42 Clad	0.040	F3-8	Replace
123	4553408075	• • • Diaphragm, RH Stringer No.6 FS 476 to FS 486	1	2024-T3 Clad	0.040	F3-8	Replace
126	4553408076	• • • Diaphragm, RH Stringer No.7 FS 462 to FS 497	1	2024-T3 Clad	0.040	F3-8	Replace
129	4553408077	• • • Diaphragm, LH & RH Stringer No.8 FS 486 to FS 497	1	2024-T3 Clad	0.050	F3-8	Replace
		- Not Illustrated					

Fuselage Fuel Cell Assembly Repair Index
Table 1 (Sheet 2 of 21)

ITEM NO.	DWG. NO.	DESCRIPTION	EFF CODE	MATERIAL	GAGE	FINISH CODE	REPAIR FIG. NO.
132	4553408078	• • • Diaphragm, RH Stringer No. 8 FS 476 to FS 486	1	2024-T3 Clad	0.040	F3-8	Replace
135	4553408084	• • • Angle	1	2024-T3 Clad	0.050	F3-8	Replace
138	4553408085	• • • Bracket, Channel	1	2024-T42 Clad	0.040	F3-8	Replace
141	4553408086	• • • Bracket, Channel	1	2024-T42 Clad	0.040	F3-8	Replace
144	4553408087	• • • Angle, Stringer No.1 FS 466	1	2024-T42 Clad	0.040	F3-8	Replace
147	4553408088	• • • Stiffener Angle, Stringer No. 5		2024-T3 Clad	0.040	F3-8	Replace
150	4553408089	• • • Channel Bracket, LH Stringer No. 5 FS 486	1	2024-T3 Clad	0.040	F3-8	Replace
153	4553408090	• • • Bracket, Channel	1	2024-T42 Clad	0.040	F3-8	Replace
156	4553408091	• • • Channel, Stringer No. 7	1	2024-T3 Clad	0.040	F3-8	Replace
159	4553408092	• • • Angle, RH Stringer 4A FS 486	1	2024-T3 Clad	0.040	F3-8	Replace
162	4553408094	• • • Angle, Stringer No. 6	1	2024-T3 Clad	0.040	F3-8	Replace
165	4553408095	• • • Angle, Stringer No. 8	1	2024-T3 Clad	0.040	F3-8	Replace
168	4553408097	• • • Angle, Stringer No. 6 & 7	1	2024-T3 Clad	0.040	F3-8	Replace
171	4553408098	• • • Stiffener Angle, Stringer No. 3	1	2024-T42 Clad	0.040	F3-8	Replace
174	4553408099	• • • Channel Bracket Stringer No. 3 (3 ea.)	1	2024-T42 Clad	0.040	F3-8	Replace
177	4553408100	• • • Channel Bracket Stringer No. 5 (3 ea.)	1	2024-T3 Clad	0.040	F3-8	Replace
180	4553408101	• • • Angle, Stringer No.7	1	2024-T420Clad	0.040	F3-8	Replace
183	4553408108	• • • Access Panel, Electrical FS 466 to FS 476 (2 ea.)	1	2024-T42 Clad	0.063	F3-8	Replace
186	4553408109	• • • Packer (18 ea.)	1	2024-T3 Clad	0.040	F3-8	Replace
189	4553408110	• • • Access Panel, Electrical FS 466 to FS 476 (2 ea.)	1	2024-T42 Clad	0.063	F3-8	Replace
192	4553408111	• • • Access Panel, Electrical FS 457 to FS 466	1	2024-T42 Clad	0.063	F3-8	Replace
195	4553408112	• • • Access Panel, Electrical FS476 to FS 486	1	2024-T42 Clad	0.063	F3-8	Replace
198	4553408162	• • • Angle, Stringer No.1 (4 ea.)	1	2024-T3 Clad	0.040	F3-8	Replace
		- Not Illustrated					

Fuselage Fuel Cell Assembly Repair Index
Table 1 (Sheet 3 of 21)

ITEM NO.	DWG. NO.	DESCRIPTION	EFF CODE	MATERIAL	GAGE	FINISH CODE	REPAIR FIG. NO.
201	4553408163	• • • Angle, Stringer No. 3 (6 ea.)	1	2024-T42 Clad	0.040	F3-8	Replace
204	4553408164	• • • Angle, Stringer No. 5 (6 ea.)	1	2024-T3 Clad	0.040	F3-8	Replace
207	4553408165	• • • Angle, Stringer No. 7 (2 ea.)	1	2024-T3 Clad	0.050	F3-8	Replace
210	4553408166	• • • Angle, Stringer No. 9 (2 ea.)	1	2024-T3 Clad	0.040	F3-8	Replace
213	4553408167	• • • Angle, Stringer No. 9 (2 ea.)	1	2024-T3 Clad	0.040	F3-8	Replace
216	4553408170	• • • Radial Stabilizer, Stringer No. 3 & 5 FS 486	1	2024-T42 Clad	0.040	F3-8	Replace
219	4553408173	• • • Radial Stabilizer, Stringer No. 3 & 5 FS 486	1	2024-T42 Clad	0.040	F3-8	Replace
222	4553408174	• • • Radial Stabilizer, Stringer No. 7 & 9 FS 476	1	2024-T42 Clad	0.032	F3-8	Replace
225	4553408175	• • • Radial Stabilizer, Stringer No.1 (2 ea.)	1	2024-T42 Clad	0.050	F3-8	Replace
228	4553408176	• • • Radial Stabilizer, Stringer No. 3 to 5 FS 466	1	2024-T42 Clad	0.040	F3-8	Replace
231	4553408177	• • • Radial Stabilizer, Stringer No. 5 to 7 FS 466 (2 ea.)	1	2024-T42 Clad	0.040	F3-8	Replace
234	4553408183	• • • Access Panel, Gravity Fill	1	2024-T3 Clad	0.100	F3-8	Replace
237	4553408235	• • • Tension Strap	1	2024-T3 Clad	0.120	F3-8	Replace
-	4553408243	• • • Backup, Fitting (2 ea.)	1	7475-T7351 Plate	2.550	F3-8	Replace
243	4553408245	• • • Radial Stabilizer, Stringer No. 3 to 5 FS 466	1	2024-T42 Clad	0.040	F3-8	Replace
246	4553408246	• • • Radial Stabilizer, Stringer No. 3 to 5 FS 476	1	2024-T42 Clad	0.040	F3-8	Replace
249	4553408247	• • • Radial Stabilizer, Stringer No. 3 to 5 FS 486	1	2024-T42 Clad	0.040	F3-8	Replace
252	4553408248	• • • Radial Stabilizer, Stringer No. 7 to 9 FS 476	1	2024-T42 Clad	0.032	F3-8	Replace
255	4553408250	• • • Angle, Stringer No. 5 FS 466 (2 ea.)	1	2024-T3 Clad	0.040	F3-8	Replace
258	4553408251	• • • Angle, Stringer No.1 FS 466 (2 ea.)	1	2024-T3 Clad	0.040	F3-8	Replace
261	4553408255	• • • Striker Bracket	1	2024-T42 Clad	0.040	F3-8	Replace
		- Not Illustrated					

Fuselage Fuel Cell Assembly Repair Index
Table 1 (Sheet 4 of 21)

ITEM NO.	DWG. NO.	DESCRIPTION	EFF CODE	MATERIAL	GAGE	FINISH CODE	REPAIR FIG. NO.
264	4553408256	• • • Support Angle	1	2024-T42 Clad	0.040	F3-8	Replace
267	4553408258	• • • Backup Fitting, Canted Frame (2 ea.)	1	7475-T7351 Plate	2.000	F3-8	Replace
270	4553408259	• • • Backup Fitting, Canted Frame (2 ea.)	1	7475-T7351 Plate	2.000	F3-8	Replace
273	4553408262	• • • Backup Angle, Stringer No. 5 (2 ea.)	1	2024-T42 Clad	0.040	F3-8	Replace
276	4553408264	• • • Coaming	1	[3]	0.040	F3-8	Replace
279	4553408265	• • • Angle, Stringer No. 5 FS 466 (2 ea.)	1	2024-T3 Clad	0.040	F3-8	Replace
282	4553408269	• • • Doubler, Skin Liner (2 ea.)	1	2024-T3 Clad	0.025	F3-8	Replace
285	4553408271	• • • Bracket, Ground Plug	1	7475-T7351 Plate	1.450	F3-8	Replace
288	4553408275	• • • Angle (2 ea.)	1	2024-T3 Clad	0.040	F3-8	Replace
291	4553408279	• • • Radial Stab., Stringer No. 7 to 9 FS 486	1	2024-T42 Clad	0.032	F3-8	Replace
294	4553408281	• • • Angle, Stringer No. 7 FS 486 (2 ea.)	1	2024-T3 Clad	0.050	F3-8	Replace
297	4553408282	• • • Angle, Stringer No. 3 (2 ea.)	1	2024-T42 Clad	0.040	F3-8	Replace
300	4553408283	• • • Channel (2 ea.)	1	2024-T3 Clad	0.040	F3-8	Replace
303	4553408286	• • • Angle, Stringer No. 7 (2 ea.)	1	2024-T3 Clad	0.050	F3-8	Replace
306	4553408287	• • • Angle (2 ea.)	1	2024-T3 Clad	0.040	F3-8	Replace
309	4553408305	• • • Support Angle FS 481.73	1	2024-T42 Clad	0.040	F3-8	Replace
312	4553408315	• • • Channel Stiffener, Stringer No. 4A	1	2024-T42 Clad	0.040	F3-8	Replace
315	4553408316	• • • Stiffener Angle	1	2024-T3 Clad	0.040	F3-8	Replace
318	4553408318	• • • Stiffener Angle	1	2024-T42 Clad	0.040	F3-8	Replace
321	4553408319	• • • Stiffener Angle	1	2024-T42 Clad	0.040	F3-8	Replace
324	4553408320	• • • Angle	1	2024-T3 Clad	0.040	F3-8	Replace
327	4553408321	• • • Bracket, Gravity Fill	1	2024-T3 Clad	0.040	F3-8	Replace
330	4553408322	• • • Hinge	1	[4]	-	-	Replace
333	4553408323	• • • Spring	1	[5]	-	-	Replace
336	4553408333	• • • Angle	1	2024-T42 Clad	0.040	F3-8	Replace
339	4553408392	• • • Fitting	1	7475-T7351 Plate	2.000	F3-8	Replace
		- Not Illustrated					

Fuselage Fuel Cell Assembly Repair Index
Table 1 (Sheet 5 of 21)

ITEM NO.	DWG. NO.	DESCRIPTION	EFF CODE	MATERIAL	GAGE	FINISH CODE	REPAIR FIG. NO.
342	4553408400	• • • Attachment Angle (2 ea.)	1	2024-T42 Clad	0.040	F3-8	Replace
345	4553408404	• • • Tension Strap	1	2024-T3 Clad	0.120	F3-8	Replace
348	4553408407	• • • Radial Stabilizer	1	2024-T42 Clad	0.050	F3-8	Replace
351	4553408412	• • • Angle (2 ea.)	1	2024-T42 Clad	0.040	F3-8	Replace
354	4553408414	• • • Packer, Stringer No. 4A FS 476 to FS 486 (2 ea.)	1	2024-T3 Clad	0.040	F3-8	Replace
-	4553408417	• • • Shoulder Bolt (2 ea.)	1	▷6	-	-	Replace
-	4553408418	• • • Shoulder Bolt (2 ea.)	1	▷6	-	-	Replace
363	4553408420	• • • Radial	1	2024-T3 Clad	0.040	F3-8	Replace
-	4553403764	• • • Attach Bushing	1	▷7			
372	4553403765	• • • Attach Bracket, Upper Pylon (2 ea.)	1	7475-T7351 Plate	0.900	F3-8	Replace
375	4553403766	• • • Attach Bracket, Lwr Pylon (2 ea.)	1	7475-T7351 Plate	1.000	F3-8	Replace
378	4553406003	• • • Skin Liner, LH Upper	1	2024-T3 Clad	0.025	F3-8	Replace
381	4553406007	• • • Skin Liner, RH Upper	1	2024-T3 Clad	0.025	F3-8	Replace
384	4553406015	• • • Doubler	1	2024-T42 Clad	0.040	F3-8	Replace
387	4553406019	• • • Doubler, Skin Liner FS 476 to FS 498	1	2024-T3 Clad	0.040	F3-8	Replace
390	4553406020	• • • Doubler, Skin Liner FS 476 to FS 498	1	2024-T3 Clad	0.040	F3-8	Replace
393	4553406021	• • • Doubler, Skin Liner FS 476 to FS 498	1	2024-T3 Clad	0.025	F3-8	Replace
396	4554500097	• • • Tension Fitting, Pylon (2 ea.)	1	7075-T7351 Plate	4.040	F3-8	Replace
399	4528102033	• • • Mounting Plate Assy.	1				Replace
402	4528102036	• • • • Mounting Plate	1	7075-T7351 Plate	1.250	F3-8	Replace
405	4582102038	• • • • Spigot, Drain	1	2024-T42 Clad	0.625	F3	Replace
408	4520008126	• • • Bracket, Electrical (10 ea.)	1	2024-T3 Clad	0.050	F3-8	Replace
411	4521202069	• • • Support Saddle, Cabin Supply (2 ea.)	1	2024-T42 Clad	0.050	F3-8	Replace
414	4521202070	• • • Support Saddle, Cabin Supply (4 ea.)	1	2024-T42 Clad	0.050	F3-8	Replace
		- Not Illustrated					

Fuselage Fuel Cell Assembly Repair Index
Table 1 (Sheet 6 of 21)

ITEM NO.	DWG. NO.	DESCRIPTION	EFF CODE	MATERIAL	GAGE	FINISH CODE	REPAIR FIG. NO.
417	4521202084	• • • Saddle, Gasper Supply Support (2 ea.)	1	2024-T42 Clad	0.050	F3-8	Replace
420	4521202085	• • • Saddle, Gasper Supply Support (2 ea.)	1	2024-T42 Clad	0.050	F3-8	Replace
423	4528102145	• • • Drain Assy.	1	-	-	-	-
-	4528102035	• • • • Tube Assy.	1	-	-	8	Replace
-	4528102048	• • • • • Tube	1	6061-T6	9	F0-10	Replace
-	4528102097	• • • • • Flange	1	6061-T4	0.050	F1	Replace
-	4528102041	• • • • NACA Vent	1	-	-	F0-F8	Replace
-	4528102003	• • • • • Throat Stock	1	10	0.040	F0-10	Replace
-	4528102005	• • • • • Neck Stock	1	10	0.040	F0-10	Replace
-	4528102007	• • • • • Packer	1	11		F0-10	Replace
-	4528102009	• • • • • Packer Cover	1	10	0.010	F0-10	Replace
-	4530702018	• • • • Tube Assy.	1	5052-0	9	12	Replace
-	4530702002	• • • • Tube	1	5052-0	9	12	Replace
-	4530702004	• • • • Tube Assy.	1	-	-	-	Replace
-	4528102097	• • • • • Flange	1	6061-T4	0.050	F1	Replace
-	4530302001	• • • • • Tube	1	6061-T6	9	F0-10	Replace
464	4528408103	• • • Mounting Plate	1	2024-T42 Clad	0.100	F3-8	Replace
466	4528408104	• • • Angle, Side Mounting	1	2024-T3 Clad	0.100	F3-8	Replace
468	4528408105	• • • Angle (4 ea.)	1	2024-T3 Clad	0.040	F3-8	Replace
470	4528408106	• • • Mounting Angle (2 ea.)	1	2024-T42 Clad	0.040	F3-8	Replace
-	4553004004	• Panel Assy., Lwr	1	-	-	-	-
477	4527102011	• • Longeron Sub-Assy. Rear Spar to FS 476.70	1	-	-	-	-
-	4527102012	• • • Bracket, Pulley	1	7475-T7351 plate	2.750	F3-8	Replace
-	4527102014	• • • Plate, Pin Guard	1	2024-T3	0.050	F3-8	Replace
-	4527102084	• • • Plate, Pin Guard	1	2024-T3	0.050	F3-8	Replace
489	4527102016	• • Angle	1	7075-T7351 Plate	1.000	F3-8	Replace
492	4527102019	• • Mounting Channel, Aileron Servo	1	7075-T7351 Plate	1.250	F3-8	Replace
495	4527102036	• • Mounting Channel, Aileron Servo	1	7075-T7351 Plate	1.000	F3-8	Replace
		- Not Illustrated					

Fuselage Fuel Cell Assembly Repair Index
Table 1 (Sheet 7 of 21)

ITEM NO.	DWG. NO.	DESCRIPTION	EFF CODE	MATERIAL	GAGE	FINISH CODE	REPAIR FIG. NO.
498	4527102037	• • Mounting Plate, Aileron Servo	1	2024-T42 Clad	0.050	F3-8	Replace
501	4527102038	• • Shear Cleat, Aileron Servo	1	2024-T3 Clad	0.050	F3-8	Replace
504	4527102039	• • Angle	1	7075-T7351 Plate	1.000	F3-8	Replace
507	4527102041 12	• • Reinforcing Angle FS 468	1	2024-T42 Clad	0.063	F3-8	Replace
510	4527102054	• • Fairlead Strip	3	Nylon 66	0.063	-	Replace
513	4527102055	• • Fairlead Strip	3	Nylon 66	0.063	-	Replace
-	4527102074 13	• • Attach Angle (2 ea.)	1	2024-T3 Clad	0.050	F3-8	Replace
519	4527102075	• • Attach Angle, Aileron Servo (2 ea.)	1	2024-T3 Clad	0.050	F3-8	Replace
522	4527102076	• • Attach Angle, Aileron Servo	1	2024-T3 Clad	0.050	F3-8	Replace
525	4527102094 14	• • Mounting Assy., Access Panel FS 472 (2 ea.)		2024-T3 Clad	0.050	F3-8	Replace
-	4527102017	• • • Mounting, Access Panel	1	7075-T7351 Plate	2.500	F3-8	Replace
-	4527102020	• • • Adapter Plate	1	7075-T7351 Plate	1.000	F3-8	Replace
-	4528202004	• • Side Shim FS 496	1	15	0.032		Replace
-	4528202011	• • Fitting, Pressure Refueling	1	7475-T7351 Plate		F3-8	Replace
570	4528202063	• • Stiffener FS 476	1	2024-T42 Clad	0.063	F3-8	Replace
573	4528202105	• • Mounting Bracket FS 475	1	2024-T42 Clad	0.050	F3-8	Replace
576	4528202111	• • Mounting Bracket FS 478	1	2024-T42 Clad	0.050	F3-8	Replace
579	4529102128	• • Support Bracket, Hydraulic Accumulator (2 ea.)	1	7075-T7351 Plate	1.500	F3-8	Replace
582	4532302011	• • Cable Bracket FS 449 (2 ea.)	1	7075-T7351 Plate	1.000	F3-8	Replace
-	4532402011	• • Mounting Bracket, Parking Brake Cable	4	7075-T7351 Plate	1.250	F3-8	Replace
588	4532402012	• • Mounting Plate, Parking Brake/Free Fall Cables	4	2024-T3 Clad	0.040	F3-8	Replace
-	4553308444	• • Laminated Shim (2 ea.)	1	15	0.032	-	Replace
-	4553308446	• • Laminated Shim (2 ea.)	1	15	0.020	-	Replace
597	4553403506	• • Angle, Stringer No.13 to 14 FS 476 (2 ea.)	1	2024-T42 Clad	0.040	F3-8	Replace
600	4553403507	• • Angle, Stringer No.14 to 15 FS 476 (2 ea.)	1	2024-T42 Clad	0.040	F3-8	Replace
		- Not Illustrated					

Fuselage Fuel Cell Assembly Repair Index
Table 1 (Sheet 8 of 21)

ITEM NO.	DWG. NO.	DESCRIPTION	EFF CODE	MATERIAL	GAGE	FINISH CODE	REPAIR FIG. NO.
603	4553403508	• • Angle, Stringer No.15 to 15A FS 476 (2 ea.)	1	2024-T42 Clad	0.040	F3-8	Replace
606	4553403509	• • Angle, Stringer No.15A to 16 FS 476 (2 ea.)	1	2024-T42 Clad	0.040	F3-8	Replace
609	4553403600	• • Attach Angle FS 486 (2 ea.)	1	2024-T42 Clad	0.040	F3-8	Replace
612	4553403605	• • Attach Angle FS 486 (2 ea.)	1	2024-T42 Clad	0.040	F3-8	Replace
615	4553403606	• • Attach Angle FS 486 (2 ea.)	1	2024-T42 Clad	0.040	F3-8	Replace
618	4553403607	• • Attach Angle FS 486 (2 ea.)	1	2024-T42 Clad	0.040	F3-8	Replace
621	4553403608	• • Attach Angle FS 486	1	2024-T42 Clad	0.040	F3-8	Replace
624	4553406004	• • Liner, LH Skin Bottom	1	2024-T3 Clad	0.032	F3-8	Replace
627	4553406005	• • Liner, RH Skin Bottom	1	2024-T3 Clad	0.032	F3-8	Replace
630	4553406006	• • Liner, Floor Skin FS 465 to FS 495	1	2024-T3 Clad	0.050	F3-8	Replace
633	4553406010	• • Diffuser Pan	1	Titan.6 AL 4V	0.040	F3-8	Replace
636	4553406017	• • Doubler FS 485 to FS 495	1	2024-T3 Clad	0.025	F3-8	Replace
639	4553406018	• • Doubler FS 485 to FS 495	1	2024-T3 Clad	0.025	F3-8	Replace
-	4553408009	• • Shim, Laminated FS 435 (2 ea.)	1	16	0.020	F3-8	Replace
645	4553408010	• • Beam FS 433 to FS 466 (2 ea.)	1	7475-T7351 Plate	1.750	F3-8	Replace
648	4553408011	• • Longeron FS 466 to FS 495 (2 ea.)	1	7475-T7351 Plate	1.500	F3-8	Replace
651	4553408012	• • Center Longeron FS 432 to FS 466 (2 ea.)	1	7475-T7351 Plate	2.000	F3-8	Replace
654	4553408013	• • Longeron FS 466 to FS 498	1	7475-T7351 Plate	1.400	F3-8	Replace
657	4553408014	• • Diaphragm BL15.34	1	2024-T42 Clad	0.040	F3-8	Replace
660	4553408018	• • Diaphragm BL 5.15	1	2024-T42 Clad	0.040	F3-8	Replace
663	4553408019	• • Diaphragm BL15.34	1	2024-T42 Clad	0.040	F3-8	Replace
666	4553408020	• • Diaphragm BL 5.15	1	2024-T42 Clad	0.040	F3-8	Replace
669	4553408021	• • Diaphragm FS 476 to FS 486	1	2024-T42 Clad	0.040	F3-8	Replace
672	4553408022	• • Diaphragm FS 476 to FS 486	1	2024-T351 Clad	0.040	F3-8	Replace
675	4553408023	• • Diaphragm FS 486	1	2024-T42 Clad	0.040	F3-8	Replace
678	4553408025	• • Angle BL15.34	1	2024-T42 Clad	0.040	F3-8	Replace
		- Not Illustrated					

Fuselage Fuel Cell Assembly Repair Index
Table 1 (Sheet 9 of 21)

ITEM NO.	DWG. NO.	DESCRIPTION	EFF CODE	MATERIAL	GAGE	FINISH CODE	REPAIR FIG. NO.
681	4553408026	• • Angle BL 5.15 (2 ea.)	1	2024-T42 Clad	0.040	F3-8	Replace
684	4553408027	• • Angle BL15.34 (2 ea.)	1	2024-T42 Clad	0.040	F3-8	Replace
687	4553408030	• • Diaphragm BL 5.15	1	2024-T3 Clad	0.040	F3-8	Replace
690	4553408031	• • Diaphragm BL15.34	1	2024-T3 Clad	0.040	F3-8	Replace
693	4553408032	• • Diaphragm, Stringer No.17 FS 475 to FS 498	1	2024-T42 Clad	0.040	F3-8	Replace
696	4553408033	• • Diaphragm BL 0.00	1	2024-T42 Clad	0.040	F3-8	Replace
-	4553408038	• • Tapered Filler FS 477 to FS 498 (2 ea.)	1	7475-T7351 Plate	0.500	F3-8	Replace
702	4553408042	• • Horizontal Stiffener FS 486	1	2024-T42 Clad	0.040	F3-8	Replace
705	4553408043	• • Angle BL 5.15	1	2024-T42 Clad	0.040	F3-8	Replace
708	4553408044	• • Angle BL 5.15	1	2024-T42 Clad	0.040	F3-8	Replace
711	4553408045	• • Angle BL 15.34	1	2024-T42 Clad	0.040	F3-8	Replace
714	4553408046	• • Angle BL 15.34	1	2024-T42 Clad	0.040	F3-8	Replace
717	4553408047	• • Angle BL 15.34	1	2024-T42 Clad	0.040	F3-8	Replace
720	4553408048	• • Angle Horizontal, BL15.34	1	2024-T42 Clad	0.040	F3-8	Replace
723	4553408049	• • Angle BL 15.34	1	2024-T42 Clad	0.040	F3-8	Replace
726	4553408050	• • Angle BL 5.15	1	2024-T42 Clad	0.040	F3-8	Replace
729	4553408060	• • Intercostal, Stringer No.11 FS 466 to FS 476 (2 ea.)	1	2024-T42 Clad	0.040	F3-8	Replace
732	4553408061	• • Intercostal, Stringer No.11 FS 476 to FS 486 (2 ea.)	1	2024-T42 Clad	0.040	F3-8	Replace
735	4553408062	• • Intercostal, Stringer No.11 FS 486 to Canted Frame	1	2024-T42 Clad	0.040	F3-8	Replace
738	4553408064	• • Intercostal, Stringer No.13 FS 466 to FS 476 (2 ea.)	1	2024-T42 Clad	0.040	F3-8	Replace
741	4553408065	• • Intercostal, Stringer No.13 FS 476 to FS 486 (2 ea.)	1	2024-T42 Clad	0.040	F3-8	Replace
744	4553408066	• • Intercostal, Stringer No.13 FS 486 to Canted Frame (2 ea.)	1	2024-T42 Clad	0.040	F3-8	Replace
747	4553408068	• • Intercostal, Stringer No.15 FS 466 to FS 476 (2 ea.)	1	2024-T42 Clad	0.040	F3-8	Replace
		- Not Illustrated					

Fuselage Fuel Cell Assembly Repair Index
Table 1 (Sheet 10 of 21)

ITEM NO.	DWG. NO.	DESCRIPTION	EFF CODE	MATERIAL	GAGE	FINISH CODE	REPAIR FIG. NO.
750	4553408069	• • Intercostal, Stringer No.15 FS 476 to FS 486 (2 ea.)	1	2024-T42 Clad	0.040	F3-8	Replace
-	4553408082	• • Intercostal, Stringer No.14 to 15 FS486 (2 ea.)	1	2024-T42 Clad	0.050	F3-8	Replace
756	4553408083	• • Intercostal, Stringer No.15A to 16 FS 486 (2 ea.)	1	2024-T42 Clad	0.040	F3-8	Replace
759	4553408117	• • Plate, Gusset	1	2024-T3Clad	0.040	F3-8	Replace
762	4553408118	• • Attach Angle, Stringer No.11 (4 ea.)	1	2024-T3 Clad	0.050	F3-8	Replace
765	4553408119	• • Attach Angle, Stringer No.11	1	2024-T3 Clad	0.050	F3-8	Replace
768	4553408120	• • Angle, Stringer No.13 (4 ea.)	1	2024-T3 Clad	0.050	F3-8	Replace
771	4553408121	• • Attach Angle, Stringer No.13 (2 ea.)	1	2024-T3 Clad	0.050	F3-8	Replace
774	4553408122	• • Plate, Gusset	1	2024-T3 Clad	0.080	F3-8	Replace
777	4553408129	• • Angle, Auxiliary Floor (2 ea.)	1	2024-T8511 Extr.	16	F3-8	Replace
780	4553408130	• • Angle, Auxiliary Floor (2 ea.)	1	2024-T8511 Extr.	17	F3-8	Replace
783	4553408131	• • Angle, Auxiliary Floor (2 ea.)	1	2024-T8511 Extr.	16	F3-8	Replace
786	4553408132	• • Angle FS 476 (2 ea.)	1	2024-T42 Clad	0.040	F3-8	Replace
789	4553408133	• • Angle FS 486 (2 ea.)	1	2024-T42 Clad	0.040	F3-8	Replace
792	4553408136	• • Stiffener FS 486	1	2024-T42 Clad	0.040	F3-8	Replace
795	4553408137	• • Angle, Stringer No.15A FS 476 (2 ea.)	1	2024-T42 Clad	0.063	F3-8	Replace
798	4553408190	• • Attach Angle, Stringer No.15 FS 476 (2 ea.)	1	2024-T3 Clad	0.040	F3-8	Replace
801	4553408191	• • Attach Angle, Stringer No.15 FS 486 (2 ea.)	1	2024-T3 Clad	0.040	F3-8	Replace
-	4553408193	• • Support Structure, S.P.P.R. Access Panel (2 ea.)	1	2024-T3 Clad	0.080	F3-8	Replace
-	4553408194	• • Stop, S.P.P.R. Support Structure (2 ea.)	1	2024-T42 Clad	0.040	F3-8	Replace
-	4553408196	• • Diaphragm, S.P.P.R. Support Structure	1	2024-T3 Clad	0.050	F3-8	Replace
-	4553408197	• • Angle, S.P.P.R. Support Structure	1	2024-T3 Clad	0.050	F3-8	Replace
		- Not Illustrated					

Fuselage Fuel Cell Assembly Repair Index
Table 1 (Sheet 11 of 21)

ITEM NO.	DWG. NO.	DESCRIPTION	EFF CODE	MATERIAL	GAGE	FINISH CODE	REPAIR FIG. NO.
816	4553408202	• • Doubler, External FS486 to FS 503	1	2024-T3 Clad	0.125	F3-8	Replace
819	4553408236	• • Strap, Tension	1	2024-T3 Clad	0.040	F3-8	Replace
822	4553408241	• • Angle, Stringer No.15 FS471 (2 ea.)	1	2024-T3 Clad	0.040	F3-8	Replace
825	4553408242	• • End Fitting BL 24.00 (2 ea.)	1	7475-T7351 Plate	3.700	F3-8	Replace
828	4553408244	• • Angle, Stringer No.15	1	2024-T3 Clad	0.040	F3-8	Replace
831	4553408252	• • Angle, Stringer No.11A	1	2024-T42 Clad	0.063	F3-8	Replace
834	4553408253	• • Coaming	1	2024-T3 Clad	0.050	F3-8	Replace
837	4553408257	• • End Fitting BL 24.00 (2 ea.)	1	7475-T7351 Plate	3.700	F3-8	Replace
840	4553408263	• • Coaming	1	2024-T3 Clad	0.050	F3-8	Replace
-	4553408276	• • Angle	1	2024-T3 Clad	0.050	F3-8	Replace
846	4553408277	• • Angle, Stringer No.15A to 16 FS 486	1	2024-T3 Clad	0.050	F3-8	Replace
849	4553408307	• • Bulkhead FS 452	1	7475-T7351 Plate	0.500	F3-8	Replace
852	4553408308	• • Diaphragm FS 444	1	7475-T7351 Plate	1.670	F3-8	Replace
855	4553408309	• • Bracket FS 452 (4 ea.)	1	7475-T7351 Plate	1.000	F3-8	Replace
858	4553408310	• • Channel BL 0.00 to 10.20 (3 ea.)	1	2024-T42 Clad	0.050	F3-8	Replace
861	4553408311	• • Angle (3 ea.)	1	2024-T3 Clad	0.050	F3-8	Replace
864	4553408313	• • Diaphragm FS 476 to FS 486	1	2024-T42 Clad	0.040	F3-8	Replace
867	4553408330	• • Filler, Tapered FS 486 (3 ea.)	1	7475-T7351 Plate	0.231	F3-8	Replace
870	4553408331	• • Tapered Filler FS 487 to FS 502 (2 ea.)	1	7050-T7451 Plate	0.276	F3-8	Replace
873	4553408332	• • Splice Plate FS 432	1	2024-T3 Clad	0.120	F3-8	Replace
876	4553408351	• • Reinforcement Bracket FS 459 (2 ea.)	1	7475-T7351 Plate		F3-8	Replace
879	4553408352 18	• • Channel Support FS 456 (2 ea.)	1	7475-T7351 Plate	3.200	F3-8	Replace
882	4553408353	• • Support BL 10 (2 ea.)	1	7475-T7351 Plate		F3-8	Replace
885	4553408354	• • Support BL 14.5 (2 ea.)	1	2024-T42 Clad	0.063	F3-8	Replace
888	4553408355	• • Support, Lwr BL18.00 (2 ea.)	1	2024-T42 Clad	0.063	F3-8	Replace
891	4553408356	• • Support, BL 26.32 (2 ea.)	1	2024-T42 Clad	0.063	F3-8	Replace
		- Not Illustrated					

Fuselage Fuel Cell Assembly Repair Index
Table 1 (Sheet 12 of 21)

ITEM NO.	DWG. NO.	DESCRIPTION	EFF CODE	MATERIAL	GAGE	FINISH CODE	REPAIR FIG. NO.
894	4553408357	• • Tie Angle FS 458 to FS 464	1	2024-T42 Clad	0.063	F3-8	Replace
897	4553408358	• • Tie Angle FS 458, BL 18	1	2024-T42 Clad	0.063	F3-8	Replace
900	4553408360	• • Tie Angle FS 458, BL 26.32	1	2024-T42 Clad	0.063	F3-8	Replace
903	4553408361	• • Support BL 26.32	1	2024-T42 Clad	0.063	F3-8	Replace
906	4553408363	• • Support FS 458	1	2024-T42 Clad	0.063	F3-8	Replace
909	4553408364	• • Tie Angle FS 463, BL18	1	2024-T42 Clad	0.063	F3-8	Replace
912	4553408365	• • Support FS 463	1	2024-T42 Clad	0.063	F3-8	Replace
915	4553408366	• • Tie Angle BL 26.32	1	2024-T42 Clad	0.063	F3-8	Replace
918	4553408367	• • Tie Angle FS 463, BL 26.31	1	2024-T42 Clad	0.063	F3-8	Replace
921	4553408368	• • Mounting Bracket, Hydraulic Accumulator	1	7475-T7351 Plate	1.950	F3-8	Replace
924	4553408369	• • Mounting Bracket, Hydraulic Accumulator		7475-T7351 Plate	1.950	F3-8	Replace
-	4553408370	• • Mounting Angle FS 494	1	2024-T42 Clad	0.063	F3-8	Replace
930	4553408373	• • Intercostal FS 486	1	2024-T42 Clad	0.040	F3-8	Replace
933	4553408374	• • Intercostal FS 486	1	2024-T42 Clad	0.040	F3-8	Replace
936	4553408380	• • Closing Plate	1	2024-T42 Clad	0.050	F3-8	Replace
939	4553408381	• • Closing Plate	1	2024-T42 Clad	0.050	F3-8	Replace
942	4553408382	• • Closing Plate	1	2024-T42 Clad	0.050	F3-8	Replace
945	4553408383	• • Closing Plate	1	2024-T42 Clad	0.050	F3-8	Replace
948	4553408384	• • Closing Plate	1	2024-T42 Clad	0.050	F3-8	Replace
951	4553408385	• • Closing Plate	1	2024-T42 Clad	0.050	F3-8	Replace
954	4553408398 ⊳10	• • Throat Washer	1	7075-T7351	0.500	F3-8	Replace
957	4553408399	• • Throat Strip	1	7075-T7351	0.250	F3-8	Replace
960	4553408413	• • Throat Plate	1	7075-T7351	0.250	F3-8	Replace
961	4553408418	• • Shouldered Bolt	1	MS21250 04 010	-	-	Replace
963	4553408419	• • Angle, Stringer No.11 RH	1	2024-T42 Clad	0.050	F3-8	Replace
966	4553408433 ⊳20	• • Nutplate Carrier	1	2024-T3 Clad	0.040	F3-8	Replace
969	4553408438	• • Nutplate Carrier	1	2024-T3 Clad	0.040	F3-8	Replace
972	4553408439	• • Nutplate Carrier	1	2024-T3 Clad	0.040	F3-8	Replace
975	4553408440	• • Nutplate Carrier	3	2024-T3 Clad	0.032	F3-8	Replace
978	4553408443	• • Nutplate Carrier	3	2024-T3 Clad	0.032	F3-8	Replace
981	4553408445	• • Nutplate Carrier	3	2024-T3 Clad	0.032	F3-8	Replace
		- Not Illustrated					

Fuselage Fuel Cell Assembly Repair Index
Table 1 (Sheet 13 of 21)

ITEM NO.	DWG. NO.	DESCRIPTION	EFF CODE	MATERIAL	GAGE	FINISH CODE	REPAIR FIG. NO.
984	4553408446	• • Nutplate Carrier	3	2024-T3 Clad	0.032	F3-8	Replace
987	4557106094	• • Fairing Skirt, LH FS 451 to FS 503	1	2024-T42 Clad	0.100	F3-8	Replace
990	4557106095	• • Fairing Skirt, RH FS 451 to FS 503	1	2024-T42 Clad	0.100	F3-8	Replace
993	4557106155	• • Angle, FS 494	1	2024-T42 Clad	0.032	F3-8	Replace
996	4557106156	• • Angle, Upper FS 486 (2 ea.)	1	2024-T3 Clad	0.050	F3-8	Replace
999	4557106157	• • Angle, Lwr FS 486 (2 ea.)	1	2024-T42 Clad	0.032	F3-8	Replace
1002	4557106158	• • Angle FS 486 to FS 498 (2 ea.)	1	2024-T3 Clad	0.032	F3-8	Replace
1005	4557106159	• • Angle FS 486 to FS 503 (2 ea.)	1	2024-T3 Clad	0.032	F3-8	Replace
1008	4557106160	• • Angle FS 486 to FS 494 (2 ea.)	1	2024-T3 Clad	0.040	F3-8	Replace
1011	4557106161	• • Angle, Fairing FS 486 (2 ea.)	1	2024-T42 Clad	0.050	F3-8	Replace
1014	4557106165	• • Attach Angle, Upper FS 475 (2 ea.)	1	2024-T3 Clad	0.040	F3-8	Replace
1017	4557106167	• • Attach Angle, Lwr FS 475 (2 ea.)	1	2024-T42 Clad	0.050	F3-8	Replace
1020	4573202011	• • Pipe, Engine Cable Support (4 ea.)	1	6061-T6	0.625	F3-8	Replace
1023	4573202012	• • Mounting Clamp, Engine Cables (4 ea.)	1	2024-T42 Clad	0.032	F3-8	Replace
1026	4553408448	• • Angle, Radial (2 ea.)	1	2024-T42 Clad	0.040	F3-8	Replace
1029	4553408449	• • Angle, Radial (2 ea.)	1	2024-T42 Clad	0.040	F3-8	Replace
1032	4553408450	• • Nutplate (6 ea.)	1	2024-T3 Clad	0.040	F3-8	Replace
1035	4553408451	• • Angle FS 466.30 (4 ea.)	1	2024-T42 Clad	0.040	F3-8	Replace
1038	4553408455	• • Nutplate (2 ea.)	1	2024-T3 Clad	0.040	F3-8	Replace
1041	4553408456	• • Nutplate (2 ea.)	1	2024-T3 Clad	0.040	F3-8	Replace
1044	4553408457	• • Nutplate (2 ea.)	1	2024-T3 Clad	0.040	F3-8	Replace
1047	4553408458	• • Attach Angle (2 ea.)	1	2024-T3 Clad	0.040	F3-8	Replace
1050	4553408459	• • Attach Angle (4 ea.)	1	2024-T3 Clad	0.040	F3-8	Replace
1053	4553408461	• • Nutplate (2 ea.)	1	2024-T3 Clad	0.040	F3-8	Replace
1056	4553408462	• • Nutplate (2 ea.)	1	2024-T3 Clad	0.040	F3-8	Replace
		- Not Illustrated					

Fuselage Fuel Cell Assembly Repair Index
Table 1 (Sheet 14 of 21)

ITEM NO.	DWG. NO.	DESCRIPTION	EFF CODE	MATERIAL	GAGE	FINISH CODE	REPAIR FIG. NO.
1059	4553408463	• • Attach Angle (2 ea.)	1	2024-T3 Clad	0.040	F3-8	Replace
1062	4553408464	• • Attach Angle (2 ea.)	1	2024-T3 Clad	0.040	F3-8	Replace
1065	4553408465	• • Attach Angle (2 ea.)	1	2024-T3 Clad	0.040	F3-8	Replace
-	4553004004V35	• • Bracket	1	2024-T3 Clad	0.040	F3-8	Replace
1071	4553403304	• Liner, Box Skin (2 ea.)	1	2024-T3 Clad	0.050	F3-8	Replace
1074	4553403305	• Support Angle	1	7475-T7351 Plate	2.000	F3-8	Replace
1077	4553403306	• Backup Fitting (2 ea.)	1	7475-T7351 Plate	1.250	F3-8	Replace
-	4553403308	• Closing Plate (2 ea.)	5	2024-T3 Clad	1.000	F3-8	Replace
1083	4553403313	• Longeron (2 ea.)	1	7475-T7351 Plate	1.250	F3-8	Replace
1086	4553403322 22	• Shear Diaphragm	5	7475-T7351 Plate	2.250	F3-8	Replace
1089	4553403325	• Angle (2 ea.)	1	2024-T3 Clad	0.050	F3-8	Replace
1092	4553403326	• Support Plate	1	2024-T3 Clad	0.100	F3-8	Replace
1095	4553403329	• Angle (2 ea.)	1	2024-T3 Clad	0.050	F3-8	Replace
-	4553403330 21	• Buttstrap	5	2024-T3 Clad	1.000	F3-8	Replace
1101	4553403381	• Angle (2 ea.)	1	2024-T42 Clad	0.040	F3-8	Replace
-	4553403553	• Splice Angle (2 ea.)	1	2024-T42 Clad	0.063	F3-8	Replace
-	4553403653	• Splice Angle	1	2024-T42 Clad	0.063	F3-8	Replace
1110	4553403654	• Splice Angle	1	2024-T42 Clad	0.063	F3-8	Replace
1113	4553403711	• Buttstrap	1	2024-T42 Clad	0.050	F3-8	Replace
1116	4553403854	• Splice Angle (2 ea.)	1	2024-T3 Clad	0.040	F3-8	Replace
1119	4553408104	• Strap, Stringer No. 9 (4 ea.)	1	2024-T3 Clad	0.040	F3-8	Replace
1122	4553408123	• Joint Angle	1	2024-T42 Clad	0.050	F3-8	Replace
1125	4553408124	• Splice Strap	1	2024-T3 Clad	0.050	F3-8	Replace
1128	4553408125	• Splice Strap	1	2024-T3 Clad	0.050	F3-8	Replace
1131	4553408138	• Intercostal	1	2024-T42 Clad	0.050	F3-8	Replace
1134	4553408139	• Intercostal	1	2024-T42 Clad	0.050	F3-8	Replace
1137	4553408140	• Intercostal	1	2024-T42 Clad	0.050	F3-8	Replace
1140	4553408142	• Intercostal	1	2024-T42 Clad	0.040	F3-8	Replace
1143	4553408143	• Intercostal	1	2024-T3 Clad	0.040	F3-8	Replace
1146	4553408144	• Intercostal	1	2024-T42 Clad	0.040	F3-8	Replace
1149	4553408145	• Intercostal	1	2024-T3 Clad	0.040	F3-8	Replace
1152	4553408146	• Intercostal	1	2024-T42 Clad	0.040	F3-8	Replace
		- Not Illustrated					

Fuselage Fuel Cell Assembly Repair Index
Table 1 (Sheet 15 of 21)

ITEM NO.	DWG. NO.	DESCRIPTION	EFF CODE	MATERIAL	GAGE	FINISH CODE	REPAIR FIG. NO.
1155	4553408147	• Intercostal	1	2024-T3 Clad	0.040	F3-8	Replace
1158	4553408148	• Intercostal	1	2024-T42 Clad	0.040	F3-8	Replace
1161	4553408149	• Intercostal	1	2024-T3 Clad	0.040	F3-8	Replace
1164	4553408150	• Intercostal	1	2024-T42 Clad	0.040	F3-8	Replace
1167	4553408151	• Intercostal	1	2024-T3 Clad	0.040	F3-8	Replace
1170	4553408152	• Attach Angle	1	2024-T3 Clad	0.040	F3-8	Replace
1173	4553408156	• Angle	1	2024-T3 Clad	0.040	F3-8	Replace
1176	4553408168	• Attach Tee (2 ea.)	1	7475-T7351 Plate	1.550	F3-8	Replace
1179	4553408199	• Splice Angle	1	2024-T3 Clad	0.050	F3-8	Replace
1182	4553408203 23	• Intercostal	1	2024-T42 Clad	0.050	F3-8	Replace
1185	4553408204	• Support	1	7450-T7351 Plate	2.000	F3-8	Replace
1188	4553408205	• Angle Stiffener	1	2024-T42 Clad	0.050	F3-8	Replace
1191	4553408206	• Angle	1	2024-T42 Clad	0.050	F3-8	Replace
1194	4553408209	• Angle, Support	1	2024-T3 Clad	0.050	F3-8	Replace
1197	4553408220	• Plate, Splice	1	2024-T3 Clad	0.050	F3-8	Replace
1200	4553408260	• Attach Fitting (2 ea.)	1	7475-T7351 Plate	1.610	F3-8	Replace
1203	4553408261	• Attach Fitting (2 ea.)	1	7475-T7351 Plate	1.610	F3-8	Replace
-	4553408280	• Buttstrap FS 451.02 (2 ea.)	1	2024-T42 Clad	0.063	F3-8	Replace
1209	4553408288	• Latch Plate	1	2024-T3Clad	0.063	F3-8	Replace
1212	4553408289	• Latch Plate	1	2024-T3Clad	0.063	F3-8	Replace
1215	4553408290	• Intercostal (2 ea.)	1	2024-T42 Clad	0.040	F3-8	Replace
1218	4553408291	• Intercostal (2 ea.)	1	2024-T3 Clad	0.040	F3-8	Replace
1221	4553408292	• Attach Angle (2 ea.)	1	2024-T3 Clad	0.040	F3-8	Replace
1224	4553408293	• Attach Angle (2 ea.)	1	2024-T3 Clad	0.040	F3-8	Replace
1227	4553408294	• Attach Angle (2 ea.)	1	2024-T3 Clad	0.040	F3-8	Replace
1230	4553408295	• Attach Channel (2 ea.)	1	2024-T3 Clad	0.040	F3-8	Replace
1233	4553408296	• Attach Angle (2 ea.)	1	2024-T3 Clad	0.040	F3-8	Replace
1236	4553408297	• Attach Angle (2 ea.)	1	2024-T3 Clad	0.040	F3-8	Replace
1239	4553408298	• Attach Angle (2 ea.)	1	2024-T3 Clad	0.040	F3-8	Replace
1242	4553408299	• Attach Angle (2 ea.)	1	2024-T3 Clad	0.040	F3-8	Replace
1245	4553408301	• Angle, Stiffener (2 ea.)	1	2024-T3 Clad	0.040	F3-8	Replace
1248	4553408302	• Attach Angle (2 ea.)	1	2024-T3 Clad	0.040	F3-8	Replace
1251	4553408303	• Attach Angle (2 ea.)	1	2024-T3 Clad	0.040	F3-8	Replace
		- Not Illustrated					

Fuselage Fuel Cell Assembly Repair Index
Table 1 (Sheet 16 of 21)

ITEM NO.	DWG. NO.	DESCRIPTION	EFF CODE	MATERIAL	GAGE	FINISH CODE	REPAIR FIG. NO.
1254	4553408304	• Strap (2 ea.)	1	2024-T3 Clad	0.100	F3-8	Replace
1257	4553408359	• Closing Angle (2 ea.)	1	2024-T42 Clad	0.040	F3-8	Replace
1260	4553408362	• Joint Strap (2 ea.)	1	2024-T42 Clad	0.050	F3-8	Replace
1263	4553408389	• Closing Plate	1	2024-T3 Clad	0.025	F3-8	Replace
1266	4553408390	• Attach Angle (2 ea.)	1	2024-T42 Clad	0.032	F3-8	Replace
1269	4553408391	• Attach Fitting	1	7475-T7351 Plate	-	F3-8	Replace
1272	4553408393	• Angle	1	2024-T3 Clad	0.050	F3-8	Replace
-	4553408403	• Packer (2 ea.)	1	2024-T3 Clad	0.032	F3-8	Replace
1278	4553408415	• Splice (2 ea.)	1	7075-T76	0.100	F3-8	Replace
-	4553408426	• Packer (2 ea.)	1	2024-T3 Clad	0.080	F3-8	Replace
-	4553408427	• Packer (2 ea.)	1	2024-T3 Clad	0.050	F3-8	Replace
-	4553408429	• Shim, Laminated (4 ea.)	1	15	0.020	-	Replace
1290	4553408430	• Attach Angle, Stringer No. 7 (2 ea.)	1	2024-T3 Clad	0.040	F3-8	Replace
1293	4553408431	• Washers, Throat (8 ea.)	1	2024-T3 Clad	0.090	F3-8	Replace
-	4553408432 23	• Plate, Splice	1	2024-T3 Clad	0.050	F3-8	Replace
1299	4553408434	• Carrier, Nutplate	1	2024-T3 Clad	0.0320	F3-8	Replace
-	4553408435	• Packer, Canted Frame	1	2024-T3 Clad	0.050	F3-8	Replace
-	4553308446	• Shim, Laminated (4 ea.)	1	15	-	-	Replace
-	4553308451	• Shim, Laminated (2 ea.)	1	15	-	-	Replace
1311	4553302852	• Angle, Splice (4 ea.)	1	2024-T3 Clad	0.040	F3-8	Replace
1314	4553408157	• Attach Angle (2 ea.)	1	2024-T3 Clad	0.040	F3-8	Replace
1317	4553408158	• Attach Angle (2 ea.)	1	2024-T3 Clad	0.040	F3-8	Replace
1320	4553408160	• Angle (2 ea.)	1	2024-T3 Clad	0.040	F3-8	Replace
-	4553408402	• Packer	1	2024-T3 Clad	0.040	F3-8	Replace
1326	4527202018	• Angle	1	7075-T73	25	F3-8	Replace
1329	4527302020	• Diaphragm	1	2024-T3 Clad	0.050	F3-8	Replace
1332	4527302021	• Angle	1	2024-T3 Clad	0.050	F3-8	Replace
-	4528102165	• Channel Assy., Cavity Vent	1	-	-	-	-
-	4528102090	• • Fillet	1	26	-	-	Replace
-	4528102180	• • Pop Insert, 1.00 Inch (106 ea.)	1	27	-	-	Replace
		- Not Illustrated					

Fuselage Fuel Cell Assembly Repair Index
Table 1 (Sheet 17 of 21)

ITEM NO.	DWG. NO.	DESCRIPTION	EFF CODE	MATERIAL	GAGE	FINISH CODE	REPAIR FIG. NO.
-	4528102181	• • Pop Insert, 0.625 Inch (12 ea.)	1	27	-	-	Replace
-	4528202003	• Shim	1	16	0.032	-	Replace
1350	4529202010	• Bracket	1	2024-T3 Clad	0.040	F3-8	Replace
1353	4529202012	• Bracket	1	7075-T7351 Plate	0.190	F3-8	Replace
1356	4529102149	• Bracket, Support	1	2024-T3 Clad	0.040	F3-8	Replace
1359	4534508108	• Plate, Adapter	1	2024-T3 Clad	0.032	F3-8	Replace
-	4530702060	• Cavity Sump Drains Installation	1	-	-	-	-
-	4530702008	• • Tube Assy.	1	-	-	28	Replace
-	4530702021	• • • Stub Tube	1	29	0.500	F1	Replace
-	4530702033	• • • Mounting Plate	1	6061-T4 Bare	0.080	F1	Replace
-	4530702034	• • • Mounting Plate	1	6061-T4 Bare	0.063	F1	Replace
-	4530702065	• • Manifold Assy.	1	-	-	28	Replace
-	4530702030	• • • Mounting Plate	1	6061-T4 Bare	0.050	F1	Replace
-	4530702007	• • • Tube	1	29	0.500	F1	Replace
-	4530702049	• • • Tube	1	29	0.500	F1	Replace
-	4530702051	• • • Tube	1	29	0.500	F1	Replace
-	4530702052	• • • Tube	1	29	0.250	F1	Replace
-	4530702070	• • Manifold Assy.	1	-	-	28	Replace
-	4530702030	• • • Mounting Plate	1	6061-T4 Bare	0.050	F1	Replace
-	4530702007	• • • Tube	1	29	0.500	F1	Replace
-	4530702051	• • • Tube	1	29	0.500	F1	Replace
-	4530702052	• • • Tube	1	29	0.250	F1	Replace
-	4530702053	• • • Tube	1	29	0.500	F1	Replace
-	4530702054	• • Tube Assy.	1	-	-	28	Replace
-	4530702029	• • • Mounting Plate	1	6061-T4 Bare	0.050	F1	Replace
-	4530702058	• • • Tube	1	29	0.250	F1	Replace
-	4530702059	• • • Tube	1	29	0.250	F1	Replace
-	4530702061	• • Drain Assy.	1	-	-	28	Replace
-	4530702029	• • • Mounting Plate	1	6061-T4 Bare	0.050	F1	Replace
-	4530702058	• • • Tube	1	29	0.250	F1	Replace
-	4530702059	• • • Tube	1	29	0.250	F1	Replace
-	4530702062	• • Stub Tube Assy.	1	-	-	28	Replace
		- Not Illustrated					

Fuselage Fuel Cell Assembly Repair Index
Table 1 (Sheet 18 of 21)

ITEM NO.	DWG. NO.	DESCRIPTION	EFF CODE	MATERIAL	GAGE	FINISH CODE	REPAIR FIG. NO.
-	4530702013	• • • Mounting Plate	1	6061-T4 Bare	0.080	F1	Replace
-	4530702063	• • • Tube	1	29	0.500	F1	Replace
-	4530702064	• • Vent Assy.	1	-	-	28	Replace
-	4530702033	• • • Mounting Plate	1	6061-T4 Bare	0.080	F1	Replace
-	4530702066	• • • Tube	1	29	0.500	F1	Replace
-	4530702067	• • • Tube	1	29	0.500	F1	Replace
-	4530702068	• • Cavity Vent Assy.	1	-	-	28	Replace
-	4530702034	• • • Mounting Plate	1	6061-T4 Bare	0.080	F1	Replace
-	4530702069	• • • Tube	1	29	0.500	F1	Replace
-	4520008153	• Blanking Plate FS 457.72	1	2024-T3 Clad	0.063	F3-8	Replace
1470	4557106154	• Angle, Aft Fairing	1	2024-T42 Clad	0.032	F3-8	Replace
-	4530702037 30	• Tube Assy., Drain	1	-	-	28	Replace
-	4530702035	• • Mounting Plate	1	6061-T4 Bare	0.050	F1	Replace
-	4530702036	• • Tube	1	29	0.250	F1	Replace
1482	4530702045	• Tube Assy.	1	-	-	28	Replace
-	4530702046	• • Mounting Plate	1	6061-T4 Bare	0.050	F1	Replace
-	4530702047	• • Tube	1	29	0.250	F1	Replace
1491	4529102148	• Bracket (3 ea.)	1	2024-T3 Clad	0.040	F3-8	Replace
1494	4529102138	• Bracket (2 ea.)	1	2024-T3 Clad	0.040	F3-8	Replace
1497	4529102134	• Bracket (2 ea.)	1	2024-T3 Clad	0.040	F3-8	Replace
1500	4553408103	• Angle (2 ea.)	1	2024-T3 Clad	0.040	F3-8	Replace
1503	4553408416	• Angle (2 ea.)	1	2024-T42 Clad	0.040	F3-8	Replace
1506	4553403303 31	• Vertical Beam (2 ea.)	1	7475-T7351 Plate	-	F3-8	Replace
-	4553004000V19	• • Bracket (2 ea.)	7	2024-T3 Clad	0.032	F4-8	Replace
1512	4530702023 30	• Tube Assy., Drain	1	-	0.250	28	Replace
1515	4530702035	• • Mounting Plate	1	6061-T4 Bare	0.050	F1	Replace
1518	4530702022	• • Tube	1	29	0.250	F1	Replace
1521	4553408195	• Diaphragm	1	2024-T3 Clad	0.050	F3-8	Replace
1524	4553408198	• Angle	1	2024-T3 Clad	0.050	F3-8	Replace
1527	4553408300	• Attach Angle (2 ea.)	1	2024-T3 Clad	0.040	F3-8	Replace
1530	4527202019	• Angle	1	7075-T7351 Plate	1.250	F3-8	Replace
1533	4553408350	• Closing Plate	1	2024-T42 Clad	0.063	F3-8	Replace
		- Not Illustrated					

Fuselage Fuel Cell Assembly Repair Index
Table 1 (Sheet 19 of 21)

ITEM NO.	DWG. NO.	DESCRIPTION	EFF CODE	MATERIAL	GAGE	FINISH CODE	REPAIR FIG. NO.
1536	4553408441	• Closing Plate	6	2024-T3 Clad	0.100	F3-8	Replace
-	4528102152	• Fuel Cell Lacing Installation	1	-	-	-	-
1542	4528102151	• • Fitting, Fuel Cell Lacing (44 ea.)	1	▷27		F1	Replace
-	4553408421	• • Packer, Fuel Cell (34 ea.)	1	2024-T3 Clad	0.032	F4-8	Replace
-	4553408422	• • Packer, Fuel Cell	1	2024-T3 Clad	0.032	F4-8	Replace
-	4553408423	• • Packer, Fuel Cell (6 ea.)	1	2024-T3 Clad	0.032	F4-8	Replace
-	4553408424	• • Packer, Fuel Cell	1	2024-T3 Clad	0.032	F4-8	Replace
-	4553408425	• • Packer, Fuel Cell	1	2024-T3 Clad	0.032	F4-8	Replace
-	4553408428	• • Packer, Fuel Cell	1	2024-T3 Clad	0.032	F4-8	Replace
1563	4553408447	• Access Panel	8	2024-T42 Clad	0.040	F3-8	Replace
1566	4553408452	• Nutplate	8	2024-T3 Clad	0.040	F3-8	Replace
1569	4553408453	• Nutplate	8	2024-T3 Clad	0.040	F3-8	Replace
1572	4553408454	• Nutplate	8	2024-T3 Clad	0.040	F3-8	Replace
1575	4553408432	• Splice Plate	6	2024-T3 Clad	0.050	F3-8	Replace
-	4553004000V28	• Bracket	6	2024-T3 Clad	0.040	F3-8	Replace
		- Not Illustrated					

EFFECTIVITY CODE	AIRCRAFT SERIAL NUMBERS
1	45-005 AND SUBSEQUENT
2	45-005 THRU 45-027
3	45-027 AND SUBSEQUENT
4	45-005 ONLY
5	45-005 THRU 45-011
6	45-012 AND SUBSEQUENT
7	45-005 THRU 45-029
8	45-037 AND SUBSEQUENT

NOTES

▷1 On Aircraft 45-009 thru TBD refer to drawing 4553403750V5.

▷2 On Aircraft 45-005 thru 45-026 refer to drawing 4553004003V7.

▷3 Make from AISI 321 annealed.

▷4 Make from M535822-12C hinge.

▷5 Make from BS 5770, Part 4, 302S25

▷6 Make from NAS6204-8

▷7 Make from AISI4130, temper S180

▷8 Finish F3-8 exterior, F3 interior

Fuselage Fuel Cell Assembly Repair Index
Table 1 (Sheet 20 of 21)

NOTES

9 Tubing 0.250 Dia., 0.028 wall thickness

10 Make from E type Glass, 9 Micron woven fiber, Silane binder

11 Use Clocel PF2 Urethane Foam

12 On Aircraft 45-005 and Subsequent refer to drawing 4553004004V25

13 On Aircraft 45-005 thru 45-026 refer to drawing 4553004004V16

14 On Aircraft 45-005 thru 45-026 refer to drawing 4553004004V9

15 MIL-S-22499/3, Type 2, Class 1

16 Make from SB07 03 109 Extrusion

17 Make from SB07 03 301 Extrusion

18 On Aircraft 45-005 and Subsequent refer to drawing 453004004V30 & 32

19 On Aircraft 45-005 thru 45-026 refer to drawing 4553004004V17

20 On Aircraft 45-005 thru 45-026 refer to drawing 4553004004V15

21 On Aircraft 45-005 thru 45-011 refer to drawing 4553004000V15

22 On Aircraft 45-005 thru 45-011 refer to drawing 4553004000V8 & 12

23 On Aircraft 45-005 thru 45-026 refer to drawing 4553004000V11

24 On Aircraft 45-005 thru 45-026 refer to drawing 4553004000V9

25 Make from SB07 02 305

26 Make from SMS 39, Type 1581, Class 3, 0.010 prepregnated glass cloth

27 Make from nylon 12, injection mold grade.

28 Finish F3-8 exterior, F3 interior or F4-8 exterior, F4 interior

29 Make from 5052-0,WW-T-700/4, 0.028 wall tubing

30 On Aircraft 45-005 and Subsequent refer to drawing 4530702023V22

31 On Aircraft 45-005 thru 45-029 refer to drawing 4553004000V16

Fuselage Fuel Cell Assembly Repair Index
Table 1 (Sheet 21 of 21)

FUSELAGE FUEL CELL ASSEMBLY - ALLOWABLE DAMAGE

1. Allowable Damage Limits

NOTE: All dimensions are in inches unless otherwise specified.

A. Fasteners
(1) Loose or failed rivets are not allowed. A loose or failed rivet can cause increased stress concentrations on the remaining rivets and lead to progressive joint failure. A careful inspection must be performed to ensure that joint failure has not spread from the area of the loose or failed rivet. (Refer to 51-40-05 for definition of rivet failure.)
(2) Loose or failed screws are not allowed. A loose or failed screw can cause increased stress concentrations on surrounding screws and lead to progressive joint failure. A careful inspection must be performed to ensure that the joint failure has not spread from the area of the loose or failed screw.

B. Cracks
(1) Cracks in any fitting or forging are not allowed. Cracked fittings or forgings must be replaced.
(2) Cracks in components other than fittings and forgings are considered allowable if properly repaired and refinished in accordance with 51-70-00.

C. Deformation
(1) Deformation of the fuselage fuel cell structure is not allowed.

D. Corrosion (See Figure 101.)
(1) Corrosion damage is permissible if the affected area is properly repaired, refinished in accordance with 51-30-15 and these repairs do not reduce the original material thickness more than specified. (Refer to 51-70-00.)
(2) Structural components must be repaired or replaced if corrosion repair reduces the original material thickness more than specified.

E. Dents
(1) Dents are permissible if smooth and without abrupt changes in contour, do not exceed 0.100 inch (2.54 mm) in depth, do not exceed 10% of total surface area in one (1) square foot, and are not closer than 0.50 inch (12.7 mm) to any rivet or structural area.
(2) Dents are not allowed if sharp, a fracture of the skin has occurred greater than 0.100 inch (2.54 mm) in depth, exceeds 10% of the total surface area in one (1) square foot, and are closer than 0.50 inch (12.7 mm) to a rivet or structural area. Such dents shall be repaired or the component replaced.

F. Scratches (See Figure 101.)
(1) Scratches are permissible if the affected area is sanded smooth, refinished in accordance with 51-70-00, and the repairs do not reduce the original material thickness more than specified. (Refer to 51-30-15 for protective treatment procedures.)
(2) Structural components must be replaced or repaired if scratches reduce the original material thickness by more than specified.

G. Nicks (See Figure 101.)
   (1) Nicks are permissible if the affected area is sanded smooth, refinished in accordance with 51-70-00, and the repairs do not reduce the original material thickness more than specified. (Refer to 51-30-15 for protective treatment procedures.)
   (2) Structural components must be replaced or repaired if nicks reduce the original material thickness more than specified.

H. Fittings and Forgings
   (1) Fittings or forgings must be replaced if cracked or if fitting hole (non-bushed) tolerance exceeds the allowable limits. (Refer to 51-70-00.)
   (2) Fittings or forgings with bushing shall be repaired.

Nominal Thickness (Inch)	Minimum Thickness (Inch)
0.016	0.0135
0.020	0.0175
0.025	0.0225
0.032	0.0295
0.040	0.0370
0.050	0.0460
0.063	0.0590
0.071	0.0670
0.080	0.0760
0.100	0.0950
0.125	0.1200
0.190	0.1800
0.250	0.2370

Allowable Material Thickness
Figure 101

FUSELAGE FUEL CELL ASSEMBLY - REPAIR

1. Repairs

A. Refer to 51-70-00 for typical repairs and allowable wear and repair data.

FUSELAGE FUEL CELL FRAME - STRUCTURAL IDENTIFICATION

1. Description (See Figure 1 and Table 1.)

A. The fuselage fuel cell frames consists of frame assemblies, doublers, and structural subassemblies. The fuselage fuel cell frames begin at FS 457.72 and continue through FS 503.69.

B. The fuselage fuel cell frames provide overall structural continuity and aerodynamics of the aircraft.

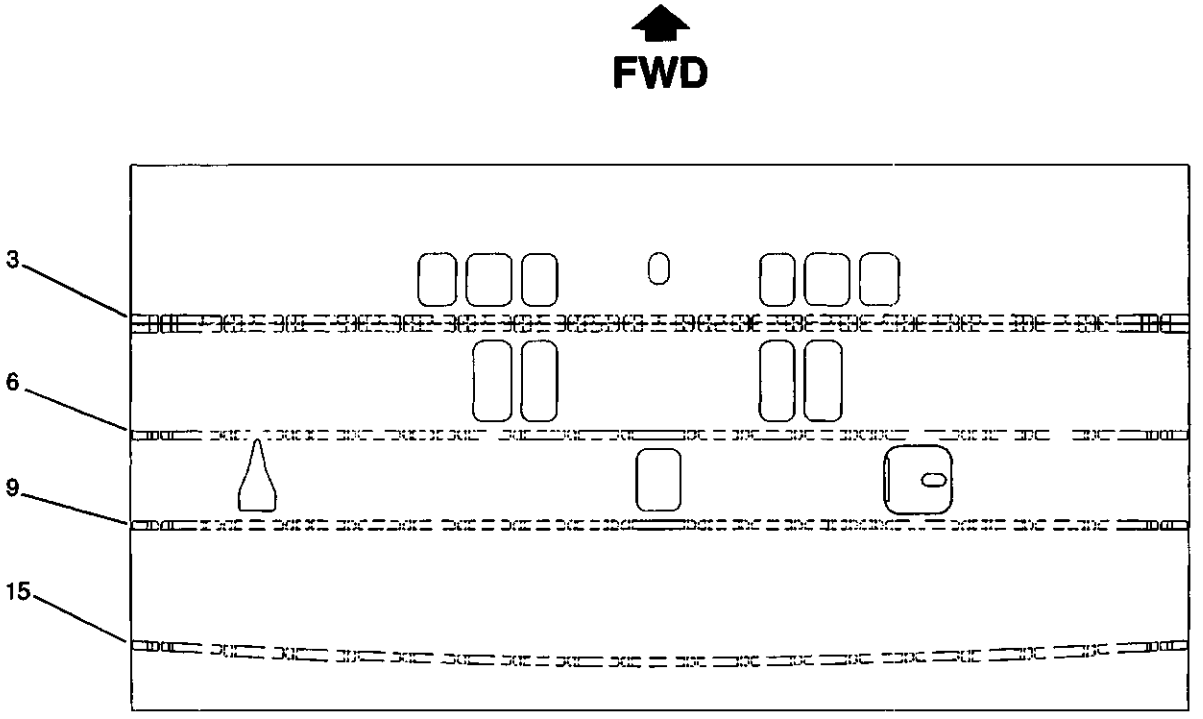

(FUSELAGE FUEL CELL TOP PANEL)

(VIEW LOOKING DOWN)

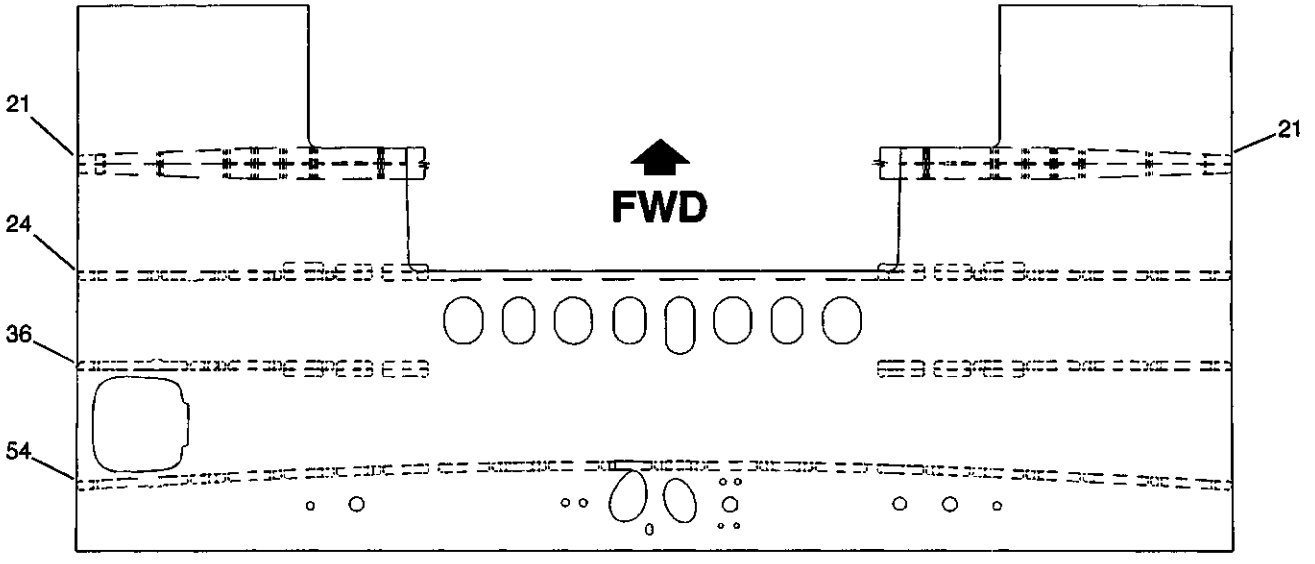

(FUSELAGE FUEL CELL LOWER PANEL)

(VIEW LOOKING UP)

S45-533010-001-01

Fuselage Fuel Cell Frames Repair Index

Figure 1

ITEM NO.	DWG. NO.	DESCRIPTION	EFF CODE	MATERIAL	GAGE	FINISH CODE	REPAIR FIG. NO.
		Fuselage Fuel Cell Frames					
	4553004000	Fuel Cell Assy.	1				
-	4553004001	• Top Panel, Fuel Cell	1				
-	4553004003	• • Top Panel, Fuel Cell	1				
-	4553004006	• • • Skin Panel Assy., Top	1				
3	4553403451	• • • • Frame, Upper FS 466.30	1	7475-T7351 Billet [1]		F3-8	Replace
6	4553403551	• • • • Frame, Upper FS 476.70	1	2024-T42 Clad	0.063	F3-8	Replace
9	4553403651	• • • • Frame, Upper FS 486.20	1	2024-T42 Clad	0.063	F3-8	Replace
-	4553403750	• • • Canted Bulkhead Assy., Upper, FS 498.69	1				
15	4553403751	• • • • Frame, Upper	1	2024-T3	0.040	F3-8	Replace
-	4553004004	• Lower Panel Assy.	1				
21	4553403401 [3]	• • Frame, Lower FS 466.30 (2 ea.)	1	7475-T7351 Billet [2]		F3-8	Replace
24	4553403500	• • Frame Assy., Lower FS 476.70	1				Replace
-	4553403501	• • • Frame FS 476.70	1	2024-T42 Clad	0.063	F3-8	Replace
-	4553403503	• • • Doubler (2 ea.)	1	2024-T42 Clad	0.040	F3-8	Replace
-	4553403505	• • • Angle	1	2024-T3	0.040	F3-8	Replace
-	4553403600	• • Frame Assy., Lower FS 486.20	1				Replace
-	4553403601	• • • Frame Sector FS 486.20	1	2024-T42 Clad	0.063	F3-8	Replace
-	4553403603	• • • Angle, Reinforcement	1	2024-T42 Clad	0.040	F3-8	Replace
-	4553403602	• • • Angle, Reinforcement	1	2024-T42 Clad	0.040	F3-8	Replace
-	4553403604	• • • Angle	1	2024-T3	0.040	F3-8	Replace
-	4553004004V33	• • • Reinforcement	1	2024-T3	0.040	F3-8	Replace
54	4553403700	• • Frame Assy., Lower Canted	1				Replace
-	4553403702	• • • Angle, Lower Skin	1	2024-T42 Clad	0.050	F3-8	Replace
-	4553403703	• • • Angle, Aux. Skin	1	2024-T42 Clad	0.080	F3-8	Replace
-	4553403705	• • • Beam	1	7475-T7351 Plate	2.750	F3-8	Replace
-	4553403707	• • • Beam	1	7475-T7351 Plate	2.250	F3-8	Replace
		- Not Illustrated					

Fuselage Fuel Cell Frames Repair Index
Table 1 (Sheet 1 of 3)

ITEM NO.	DWG. NO.	DESCRIPTION	EFF CODE	MATERIAL	GAGE	FINISH CODE	REPAIR FIG. NO.
-	4553403708	• • • Beam	1	7475-T7351 Plate	2.250	F3-8	Replace
-	4553403709	• • • Angle (2 ea.)	1	7475-T7351 Plate	0.750	F3-8	Replace
-	4553403710	• • • Buttstrap	1	2024-T3 Clad	0.050	F3-8	Replace
-	4553403713	• • • Beam	1	7475-T7351 Plate	2.00	F3-8	Replace
-	4553403714	• • • Beam	1	7475-T7351 Plate	1.500	F3-8	Replace
-	4553403715	• • • Beam	1	7475-T7351 Plate	1.750	F3-8	Replace
-	4553403716	• • • Beam	1	7475-T7351 Plate	2.000	F3-8	Replace
-	4553403720	• • • Bulkhead Sub-Assembly	1				
-	4553403701	• • • • Frame (2 ea.)	1	2024-T3 Clad	0.050	F3-8	Replace
-	4553403718	• • • • Doubler (2 ea.)	1	2024-T3 Clad	0.080	F3-8	Replace
-	4553403758	• • • Beam	1	7475-T7351 Plate	2.000	F3-8	Replace
-	4553408028	• • • Angle	1	2024-T42 Clad	0.040	F3-8	Replace
-	4553408029	• • • Angle	1	2024-T42 Clad	0.040	F3-8	Replace
-	4553408034	• • • Angle (2 ea.)	1	2024-T3 Clad	0.040	F3-8	Replace
-	4553408035	• • • Angle	1	2024-T42 Clad	0.040	F3-8	Replace
-	4553408036	• • • Angle (2 ea.)	1	2024-T3 Clad	0.040	F3-8	Replace
-	4553408037	• • • Angle (2 ea.)	1	2024-T42 Clad	0.040	F3-8	Replace
-	4553408192	• • • Attachment Angle (2 ea.)	1	2024-T42 Clad	0.040	F3-8	Replace
-	4553408239	• • • Bracket, Defuel	1	7475-T7351 Plate	0.750	F3-8	Replace
-	4553408284	• • • End Fitting (2 ea.)	1	7475-T7351 Plate	0.800	F3-8	Replace
-	4553408285	• • • End Fitting (2 ea.)	1	7475-T7351 Plate	0.800	F3-8	Replace
-	4553408312	• • • Angle (3 ea.)	1	2024-T3 Clad	0.050	F3-8	Replace
-	4553408346	• • • Doubler, Channel	1	2024-T42 Clad	0.040	F3-8	Replace
-	4553408371	• • • Channel BL5.15	1	2024-T42 Clad	0.050	F3-8	Replace
-	4553408372	• • • Channel BL15.35	1	2024-T42 Clad	0.050	F3-8	Replace
-	4530702011	• • • Support Angle (2 ea.)	1	2024-T42 Clad	0.050	F3-8	Replace
-	4530702012	• • • Support Angle (6 ea.)	1	2024-T42 Clad	0.050	F3-8	Replace
-	4529202013	• • • Bracket	1	2024-T3 Clad	0.032	F3-8	Replace
-	4529202014	• • • Bracket	1	2024-T42 Clad	0.032	F3-8	Replace
-	4528202112	• • • Angle, Tube Support (2 ea.)	1	2024-T3 Clad	0.050	F3-8	Replace
-	4528202084	• • • Angle, Tube Support (4 ea.)	1	2024-T3 Clad	0.050	F3-8	Replace
-	4553408408	• • • Shim, Laminated (4 ea.)	1	▷	0.020		Replace
		- Not Illustrated					

Fuselage Fuel Cell Frames Repair Index
Table 1 (Sheet 2 of 3)

ITEM NO.	DWG. NO.	DESCRIPTION	EFF CODE	MATERIAL	GAGE	FINISH CODE	REPAIR FIG. NO.
-	4553408409	• • • Shim, Laminated	1	[4]	0.020		Replace
-	4553408410	• • • Shim, Laminated (2 ea.)	1	[4]	0.020		Replace
-	4553408411	• • • Shim, Laminated	1	[4]	0.020		Replace
-	4553403301 [6]	• • • Pressure Bulkhead (2 ea.)	1	7475-T7351 Plate [5]	2.750	F3-8-11	Replace
		- Not Illustrated					

EFFECTIVITY CODE	AIRCRAFT SERIAL NUMBERS
1	45-005 AND SUBSEQUENT

NOTES

[1] Make from 45.53302859 Billet

[2] Make from 45.53303105 Billet

[3] 45-005 and Subsequent. See Dwg 455340340 Var 23.

[4] Make from MIL-S-22499/3, Type 2, Class1

[5] Make from 4553403351

[6] Aircraft 45-008 thru 45-039. See Dwg 4553004000 Var 20, 26 & 27.

Fuselage Fuel Cell Frames Repair Index
Table 1 (Sheet 3 of 3)

FUSELAGE FUEL CELL FRAMES - ALLOWABLE DAMAGE

1. Allowable Damage Limits

NOTE: All dimensions are in inches unless otherwise specified.

A. Fasteners
(1) Loose or failed rivets are not allowed. A loose or failed rivet can cause increased stress concentrations on the remaining rivets and lead to progressive joint failure. A careful inspection must be performed to ensure that joint failure has not spread from the area of the loose or failed rivet. (Refer to 51-40-05 for definition of rivet failure.)
(2) Loose or failed screws are not allowed. A loose or failed screw can cause increased stress concentrations on surrounding screws and lead to progressive joint failure. A careful inspection must be performed to ensure that the joint failure has not spread from the area of the loose or failed screw.

B. Cracks
(1) Cracks in any fitting or forging are not allowed. Cracked fittings or forgings must be replaced.
(2) Cracks in components other than fittings and forgings are considered allowable if properly repaired and refinished in accordance with 51-70-00.

C. Deformation
(1) Deformation of the fuselage fuel cell frame structure is not allowed.

D. Corrosion (See Figure 101.)
(1) Corrosion damage is permissible if the affected area is properly repaired, refinished in accordance with 51-30-15 and these repairs do not reduce the original material thickness more than specified. (Refer to 51-70-00.)
(2) Structural components must be repaired or replaced if corrosion repair reduces the original material thickness more than specified.

E. Dents
(1) Dents are permissible if smooth and without abrupt changes in contour, do not exceed 0.100 inch (2.54 mm) in depth, do not exceed 10% of total surface area in one (1) square foot, and are not closer than 0.50 inch (12.7 mm) to any rivet or structural area.
(2) Dents are not allowed if sharp, a fracture of the skin has occurred greater than 0.100 inch (2.54 mm) in depth, exceeds 10% of the total surface area in one (1) square foot, and are closer than 0.50 inch (12.7 mm) to a rivet or structural area. Such dents shall be repaired or the component replaced.

F. Scratches (See Figure 101.)
(1) Scratches are permissible if the affected area is sanded smooth, refinished in accordance with 51-70-00, and the repairs do not reduce the original material thickness more than specified. (Refer to 51-30-15 for protective treatment procedures.)
(2) Structural components must be replaced or repaired if scratches reduce the original material thickness by more than specified.

G. Nicks (See Figure 101.)
   (1) Nicks are permissible if the affected area is sanded smooth, refinished in accordance with 51-70-00, and the repairs do not reduce the original material thickness more than specified. (Refer to 51-30-15 for protective treatment procedures.)
   (2) Structural components must be replaced or repaired if nicks reduce the original material thickness more than specified.

H. Fittings and Forgings
   (1) Fittings or forgings must be replaced if cracked or if fitting hole (non-bushed) tolerance exceeds the allowable limits. (Refer to 51-70-00.)
   (2) Fittings or forgings with bushing shall be repaired.

Nominal Thickness (Inch)	Minimum Thickness (Inch)
0.016	0.0135
0.020	0.0175
0.025	0.0225
0.032	0.0295
0.040	0.0370
0.050	0.0460
0.063	0.0590
0.071	0.0670
0.080	0.0760
0.100	0.0950
0.125	0.1200
0.190	0.1800
0.250	0.2370

Allowable Material Thickness
Figure 101

FUSELAGE FUEL CELL FRAMES - REPAIR

1. Repairs

A. Refer to 51-70-00 for typical repairs and allowable wear and repair data.

FUSELAGE FUEL CELL STRINGERS - STRUCTURAL IDENTIFICATION

1. Description (See Figure 1 and Table 1.)

A. The fuselage fuel cell stringers provide longitudinal support of the overall composition of the fuel cell. The stringers are located around the perimeter of the frames. The stringers are spaced approximately five inches apart and are made from aluminum extrusion cut to various lengths.

B. The fuselage fuel cell stringers provides overall structural continuity and aerodynamics of the aircraft.

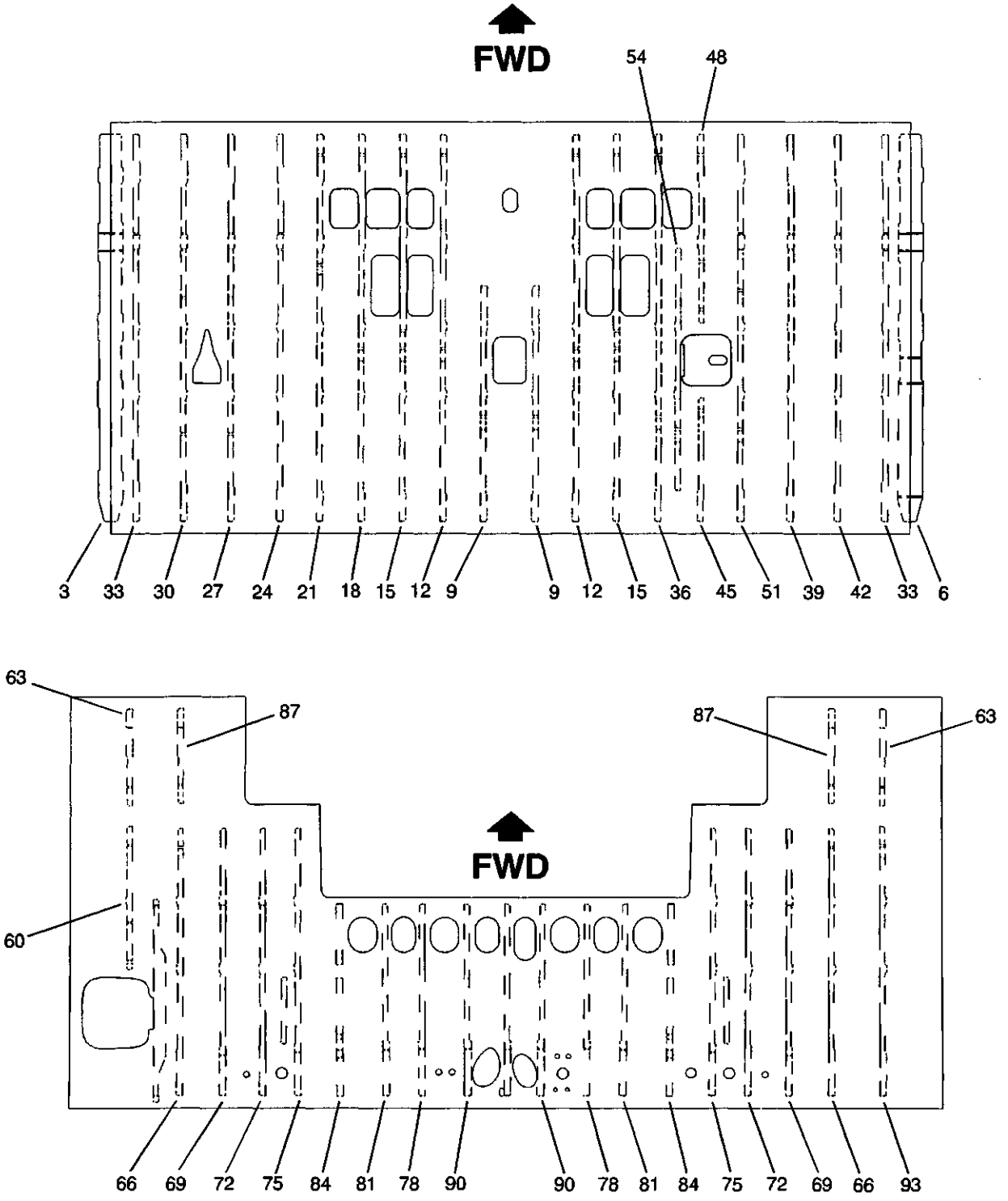

S45-533020-001-01

Fuselage Fuel Cell Stringers Repair Index
Figure 1

ITEM NO.	DWG. NO.	DESCRIPTION	EFF CODE	MATERIAL	GAGE	FINISH CODE	REPAIR FIG. NO.
		Fuselage Fuel Cell Stringers					
	4553004000	Fuel Cell Assy.	1	-	-	-	-
-	4553004001	• Fuel Cell Panel, Top	1	-	-	-	-
-	4553004003	• • Fuel Cell Panel, Top	1	-	-	-	-
-	4553004006	• • • Skin Panel Assy., Top	1	-	-	-	-
3	4553407001	• • • • Stringer 10, LH FS 452.62 to 502.07	1	2024-T8511 Extr.	1	F3-8	51-70-00
6	4553407002	• • • • Stringer 10, RH FS 452.62 to 502.07	1	2024-T8511 Extr.	1	F3-8	51-70-00
9	4553407051	• • • • Stringer 1, LH & RH FS 471.90 to 502.07	1	2024-T8511 Extr.	2	F3-8	51-70-00
12	4553407052	• • • • Stringer 2, LH & RH FS 452.62 to 502.07	1	2024-T8511 Extr.	3	F3-8	51-70-00
15	4553407053	• • • • Stringer 3, LH & RH FS 452.62 to 502.07	1	2024-T8511 Extr.	2	F3-8	51-70-00
18	4553407054	• • • • Stringer 4, LH FS 452.62 to 502.07	1	2024-T8511 Extr.	3	F3-8	51-70-00
21	4553407055	• • • • Stringer 5, LH FS 452.62 to 502.07	1	2024-T8511 Extr.	2	F3-8	51-70-00
24	4553407058	• • • • Stringer 6, LH FS 452.62 to 502.07	1	2024-T8511 Extr.	3	F3-8	51-70-00
27	4553407059	• • • • Stringer 7, LH FS 452.62 to 502.07	1	2024-T8511 Extr.	2	F3-8	51-70-00
30	4553407060	• • • • Stringer 8, LH FS 452.57 to 502.07	1	2024-T8511 Extr.	3	F3-8	51-70-00
33	4553407061	• • • • Stringer 9, LH & RH FS 452.62 to 502.07	1	2024-T8511 Extr.	2	F3-8	51-70-00
36	4553407063	• • • • Stringer 4, RH FS 452.62 to 502.07	1	2024-T8511 Extr.	3	F3-8	51-70-00
39	4553407064	• • • • Stringer 7, RH FS 452.62 to 502.07	1	2024-T8511 Extr.	2	F3-8	51-70-00
42	4553407065	• • • • Stringer 8, RH FS 452.62 to 502.07	1	2024-T8511 Extr.	3	F3-8	51-70-00
		- Not Illustrated					

Fuselage Fuel Cell Stringers Repair Index
Table 1 (Sheet 1 of 3)

ITEM NO.	DWG. NO.	DESCRIPTION	EFF CODE	MATERIAL	GAGE	FINISH CODE	REPAIR FIG. NO.
45	4553407066	• • • • Stringer 5, RH FS 486.25 to 502.07	1	2024-T8511 Extr.	2	F3-8	51-70-00
48	4553407067	• • • • Stringer 5, RH Fwd FS 452.62 to 476.70	1	2024-T8511 Extr.	2	F3-8	51-70-00
51	4553407068	• • • • Stringer 6, RH FS 452.62 to 502.07	1	2024-T8511 Extr.	3	F3-8	51-70-00
54	4553407069	• • • • Stringer 4A, RH FS 467.15 to 498.13	1	2024-T8511 Extr.	2	F3-8	51-70-00
-	4553004004	• Panel Assy., Lower Fuel Cell	1	-	-	-	-
60	4553407003	• • Stringer 11, LH FS 467.15 to 502.07	1	2024-T8511 Extr.	2	F3-8	51-70-00
63	4553407004	• • Stringer 11, LH & RH FS 452.62 to 464.00	1	2024-T8511 Extr.	4	F3-8	51-70-00
66	4553407006	• • Stringer 12, LH & RH FS 467.15 to 502.07	1	2024-T8511 Extr.	3	F3-8	51-70-00
69	4553407007	• • Stringer 13, LH & RH FS 467.15 to 502.07	1	2024-T8511 Extr.	2	F3-8	51-70-00
72	4553407008	• • Stringer 14, LH & RH FS 467.15 to 502.07	1	2024-T8511 Extr.	4	F3-8	51-70-00
75	4553407009	• • Stringer 15, LH/RH FS 467.15 to 502.07	1	2024-T8511 Extr.	4	F3-8	51-70-00
78	4553407011	• • Stringer 18, LH & RH FS 476.00 to 503.00	1	2024-T8511 Extr.	5	F3-8	51-70-00
81	4553407012	• • Stringer 17, LH & RH FS 476.00 to 503.00	1	2024-T8511 Extr.	4	F3-8	51-70-00
84	4553407013	• • Stringer 16, LH & RH FS 477.00 to 502.00	1	2024-T8511 Extr.	6	F3-8	51-70-00
87	4553407014	• • Stringer 12, LH & RH FS 452.62 to 464.00	1	2024-T8511 Extr.	4	F3-8	51-70-00
90	4553407020	• • Stringer 19, LH & RH FS 477.00 to 502.00	1	2024-T8511 Extr.	2	F3-8	51-70-00
93	4553407021	• • Stringer 11, RH FS 466.00 to 486.00	1	2024-T8511 Extr.	2	F3-8	51-70-00
		- Not Illustrated					

Fuselage Fuel Cell Stringers Repair Index
Table 1 (Sheet 2 of 3)

EFFECTIVITY CODE	AIRCRAFT SERIAL NUMBERS
1	45-005 AND SUBSQUENT

NOTES

1. SB07 10 002 Extrusion
2. SB07 10 008 Extrusion
3. SB07 10 001 Extrusion
4. Cruzet Extrusion 526
5. SB07 10 007 Extrusion
6. SB07 10 006 Extrusion

Fuselage Fuel Cell Stringers Repair Index
Table 1 (Sheet 3 of 3)

FUSELAGE FUEL CELL STRINGERS - ALLOWABLE DAMAGE

1. Allowable Damage Limits

NOTE: All dimensions are in inches unless otherwise specified.

A. Fasteners
(1) Loose or failed rivets are not allowed. A loose or failed rivet can cause increased stress concentrations on the remaining rivets and lead to progressive joint failure. A careful inspection must be performed to ensure that joint failure has not spread from the area of the loose or failed rivet. (Refer to 51-40-05 for definition of rivet failure.)
(2) Loose or failed screws are not allowed. A loose or failed screw can cause increased stress concentrations on surrounding screws and lead to progressive joint failure. A careful inspection must be performed to ensure that the joint failure has not spread from the area of the loose or failed screw.

B. Cracks
(1) Cracks in any fitting or forging are not allowed. Cracked fittings or forgings must be replaced.
(2) Cracks in components other than fittings and forgings are considered allowable if properly repaired and refinished in accordance with 51-70-00.

C. Deformation
(1) Deformation of the fuselage fuel cell stringer structure is not allowed.

D. Corrosion (See Figure 101.)
(1) Corrosion damage is permissible if the affected area is properly repaired, refinished in accordance with 51-30-15 and these repairs do not reduce the original material thickness more than specified. (Refer to 51-70-00.)
(2) Structural components must be repaired or replaced if corrosion repair reduces the original material thickness more than specified.

E. Dents
(1) Dents are permissible if smooth and without abrupt changes in contour, do not exceed 0.100 inch (2.54 mm) in depth, do not exceed 10% of total surface area in one (1) square foot, and are not closer than 0.50 inch (12.7 mm) to any rivet or structural area.
(2) Dents are not allowed if sharp, a fracture of the skin has occurred greater than 0.100 inch (2.54 mm) in depth, exceeds 10% of the total surface area in one (1) square foot, and are closer than 0.50 inch (12.7 mm) to a rivet or structural area. Such dents shall be repaired or the component replaced.

F. Scratches (See Figure 101.)
(1) Scratches are permissible if the affected area is sanded smooth, refinished in accordance with 51-70-00, and the repairs do not reduce the original material thickness more than specified. (Refer to 51-30-15 for protective treatment procedures.)
(2) Structural components must be replaced or repaired if scratches reduce the original material thickness by more than specified.

G. Nicks (See Figure 101.)
   (1) Nicks are permissible if the affected area is sanded smooth, refinished in accordance with 51-70-00, and the repairs do not reduce the original material thickness more than specified. (Refer to 51-30-15 for protective treatment procedures.)
   (2) Structural components must be replaced or repaired if nicks reduce the original material thickness more than specified.

H. Fittings and Forgings
   (1) Fittings or forgings must be replaced if cracked or if fitting hole (non-bushed) tolerance exceeds the allowable limits. (Refer to 51-70-00.)
   (2) Fittings or forgings with bushing shall be repaired.

Nominal Thickness (Inch)	Minimum Thickness (Inch)
0.016	0.0135
0.020	0.0175
0.025	0.0225
0.032	0.0295
0.040	0.0370
0.050	0.0460
0.063	0.0590
0.071	0.0670
0.080	0.0760
0.100	0.0950
0.125	0.1200
0.190	0.1800
0.250	0.2370

Allowable Material Thickness
Figure 101

FUSELAGE FUEL CELL STRINGERS - REPAIR

1. Repairs

A. Refer to 51-70-00 for typical repairs and allowable wear and repair data.

FUSELAGE FUEL CELL SKINS - STRUCTURAL IDENTIFICATION

1. Description (See Figure 1 and Table 1.)

A. The fuselage fuel cell skins provides overall structural continuity and aerodynamics of the aircraft.

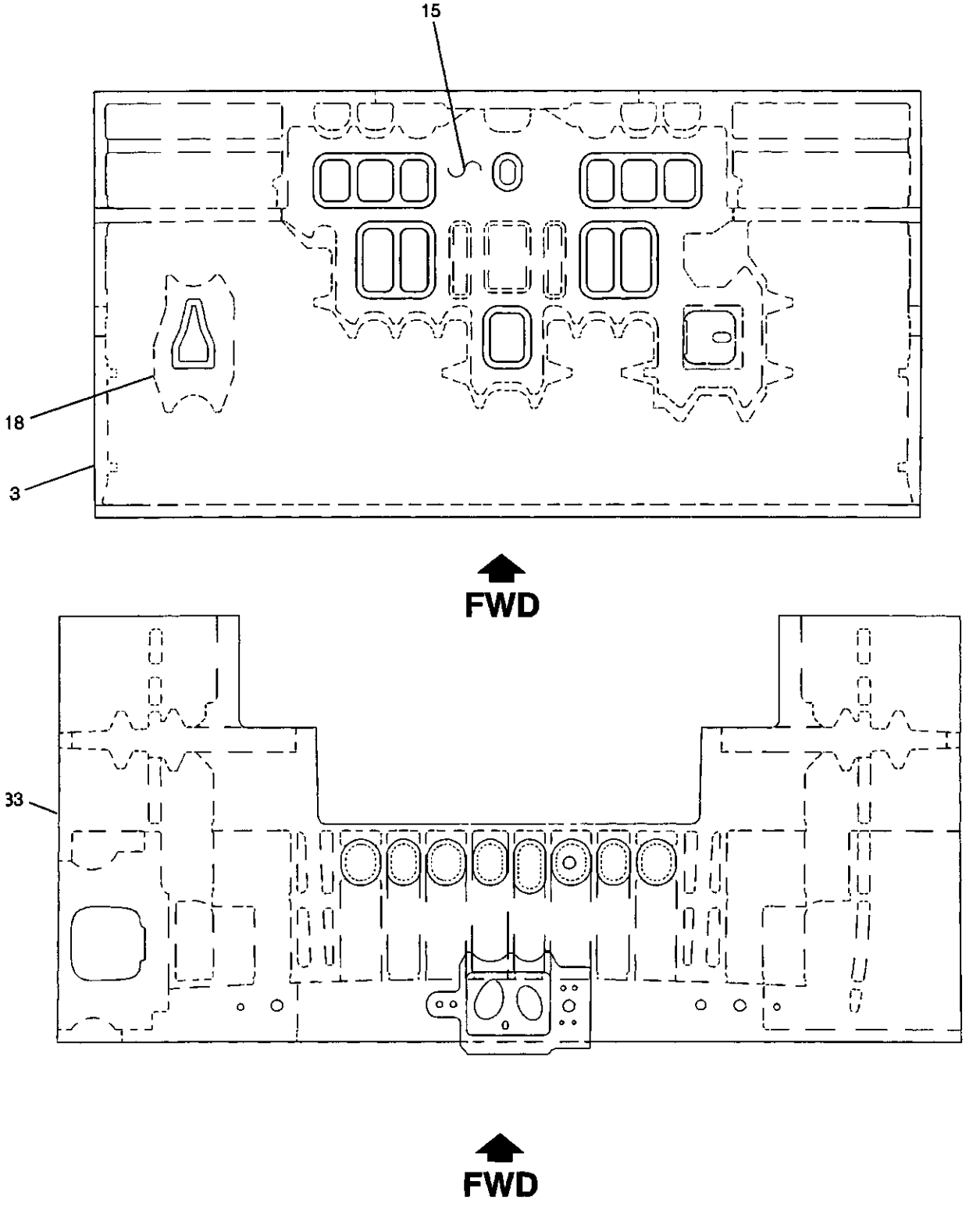

S45-533040-001-01

Fuselage Fuel Cell Skins Repair Index
Figure 1

ITEM NO.	DWG. NO.	DESCRIPTION	EFF CODE	MATERIAL	GAGE	FINISH CODE	REPAIR FIG. NO.
		Fuselage Fuel Cell Skins					
	4553004000	Fuel Cell Assembly	1	-	-	-	-
	4553004001	• Fuel Cell Panel, Top	1	-	-	-	-
	4553004003	• • Fuel Cell Panel, Top	1	-	-	-	-
	4553004006	• • • Skin Panel Assy., Top	1	-	-	-	-
3	4553406000	• • • • Upper Skin Panel	1	2024-T42 Clad	0.080	F3-8	Replace
-	4553408040	• • • • Splice Strap, Upper FS 451.02	1	2024-T42 Clad	0.080	F3-8	Replace
-	4553408041	• • • • Splice Strap, Lower FS 451.02	1	2024-T3 Clad	0.063	F3-8	Replace
-	4553408106	• • • • Doubler, Stringer 10	1	2024-T3 Clad	0.040	F3-8	Replace
15	4553408107	• • • • Doubler, Roof Panel	1	2024-T42 Clad	0.063	F3-8	Replace
18	4553408135	• • • • Doubler, NACA Inlet Duct	1	2024-T3 Clad	0.040	F3-8	Replace
-	4553406022	• • • • Doubler, Engine Supply (2 ea.)	1	2024-T3 Clad	0.040	F3-8	Replace
-	4553004004	• Panel Assy., Lower Fuel Cell	1	-	-	-	-
-	4553406002	• • Skin Panel, Auxiliary Fuel Cell	1	2024-T42 Clad	0.120	F3-8	Replace
33	4553406001	• • Skin Panel, Lower Fuel Cell	1	2024-T42 Clad	0.120	▷1	Replace

EFFECTIVITY CODE	AIRCRAFT SERIAL NUMBERS
1	45-005 AND SUBSEQUENT

NOTES

▷1 Finish F3-8 interior, F3-8 exterior inside fairing, F3 exterior outside fairing.

Fuselage Fuel Cell Skins Repair Index
Table 1

FUSELAGE FUEL CELL SKINS - ALLOWABLE DAMAGE

1. Allowable Damage Limits

NOTE: All dimensions are in inches unless otherwise specified.

A. Fasteners
(1) Loose or failed rivets are not allowed. A loose or failed rivet can cause increased stress concentrations on the remaining rivets and lead to progressive joint failure. A careful inspection must be performed to ensure that joint failure has not spread from the area of the loose or failed rivet. (Refer to 51-40-05 for definition of rivet failure.)
(2) Loose or failed screws are not allowed. A loose or failed screw can cause increased stress concentrations on surrounding screws and lead to progressive joint failure. A careful inspection must be performed to ensure that the joint failure has not spread from the area of the loose or failed screw.

B. Cracks
(1) Cracks in any fitting or forging are not allowed. Cracked fittings or forgings must be replaced.
(2) Cracks in components other than fittings and forgings are considered allowable if properly repaired and refinished in accordance with 51-70-00.

C. Deformation
(1) Deformation of the fuselage fuel cell skin structure is not allowed.

D. Corrosion (See Figure 101.)
(1) Corrosion damage is permissible if the affected area is properly repaired, refinished in accordance with 51-30-15 and these repairs do not reduce the original material thickness more than specified. (Refer to 51-70-00.)
(2) Structural components must be repaired or replaced if corrosion repair reduces the original material thickness more than specified.

E. Dents
(1) Dents are permissible if smooth and without abrupt changes in contour, do not exceed 0.100 inch (2.54 mm) in depth, do not exceed 10% of total surface area in one (1) square foot, and are not closer than 0.50 inch (12.7 mm) to any rivet or structural area.
(2) Dents are not allowed if sharp, a fracture of the skin has occurred greater than 0.100 inch (2.54 mm) in depth, exceeds 10% of the total surface area in one (1) square foot, and are closer than 0.50 inch (12.7 mm) to a rivet or structural area. Such dents shall be repaired or the component replaced.

F. Scratches (See Figure 101.)
(1) Scratches are permissible if the affected area is sanded smooth, refinished in accordance with 51-70-00, and the repairs do not reduce the original material thickness more than specified. (Refer to 51-30-15 for protective treatment procedures.)
(2) Structural components must be replaced or repaired if scratches reduce the original material thickness by more than specified.

G. Nicks (See Figure 101.)
   (1) Nicks are permissible if the affected area is sanded smooth, refinished in accordance with 51-70-00, and the repairs do not reduce the original material thickness more than specified. (Refer to 51-30-15 for protective treatment procedures.)
   (2) Structural components must be replaced or repaired if nicks reduce the original material thickness more than specified.

H. Fittings and Forgings
   (1) Fittings or forgings must be replaced if cracked or if fitting hole (non-bushed) tolerance exceeds the allowable limits. (Refer to 51-70-00.)
   (2) Fittings or forgings with bushing shall be repaired.

Nominal Thickness (Inch)	Minimum Thickness (Inch)
0.016	0.0135
0.020	0.0175
0.025	0.0225
0.032	0.0295
0.040	0.0370
0.050	0.0460
0.063	0.0590
0.071	0.0670
0.080	0.0760
0.100	0.0950
0.125	0.1200
0.190	0.1800
0.250	0.2370

Allowable Material Thickness
Figure 101

FUSELAGE FUEL CELL SKINS - REPAIR

1. Repairs

A. Refer to 51-70-00 for typical repairs and allowable wear and repair data.

DELTA FIN ASSEMBLY - STRUCTURAL IDENTIFICATION

1. Description (See Figure 1 and Table 1.)

A. The delta fins enhance the stability and aerodynamics of the aircraft.

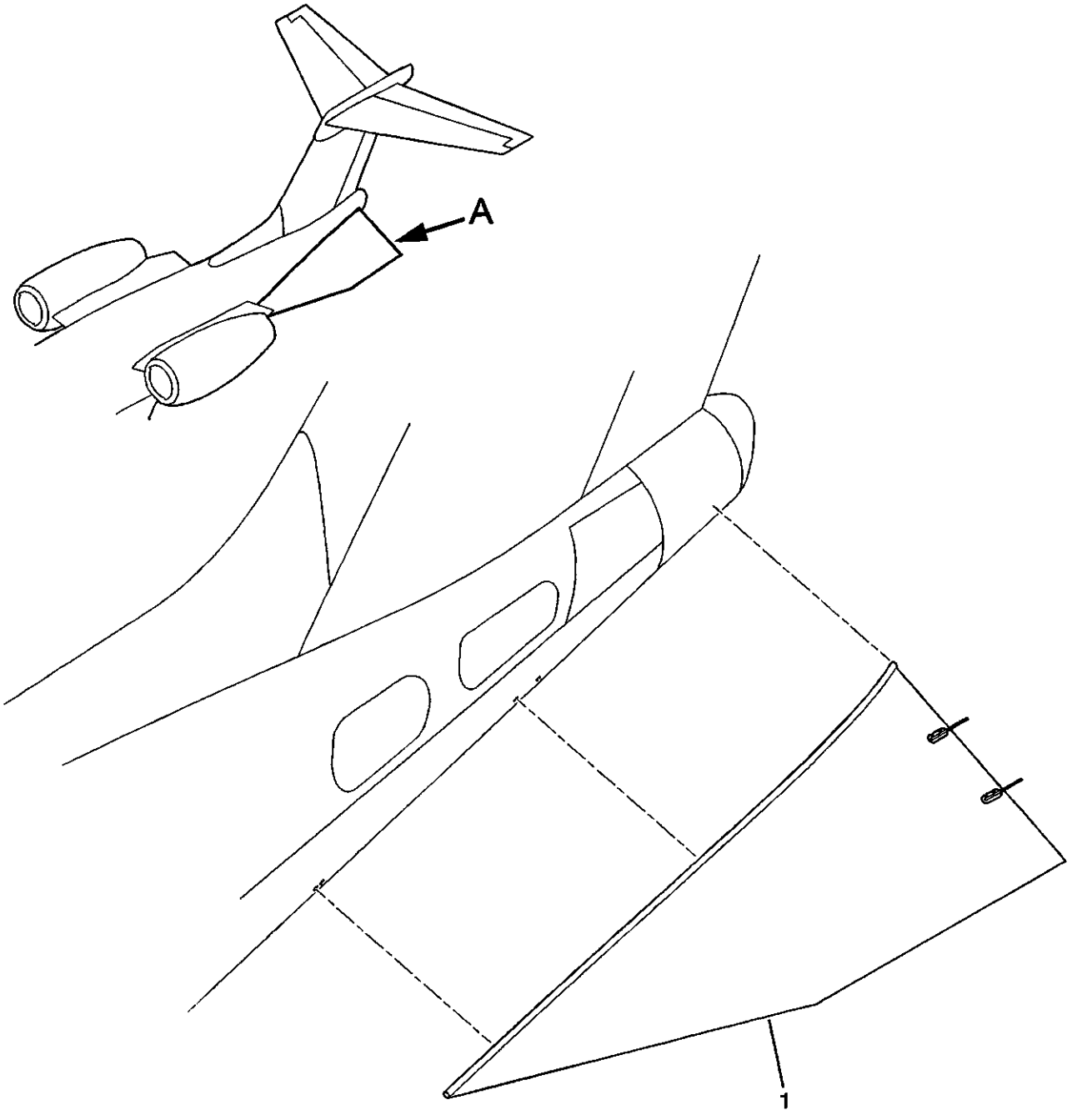

Detail A

S45-533410-001-01

Delta Fin Assembly Repair Index
Figure 1

ITEM NO.	DWG. NO.	DESCRIPTION	EFF CODE	MATERIAL	GAGE	FINISH CODE	REPAIR FIG. NO.
-	4555501001	Delta Fin Instl	-	-	-	-	-
1	4555501000	• Delta Fin Assy, LH & RH	1	▷	-	-	Replace
		- Not Illustrated					

EFFECTIVITY CODE	AIRCRAFT SERIAL NUMBERS
1	45-005 AND SUBSEQUENT

NOTES

▷ The Delta Fin Assembly is a Honeycomb/bonded unit and is sold only as an assembly.

Delta Fin Assembly Repair Index
Table 1

DELTA FIN ASSEMBLY - ALLOWABLE DAMAGE

1. Allowable Damage Limits

NOTE: Repairs to the delta fins is limited to replacement only, except as noted below. The following information pertains to the fairing and attachment points of the delta fins. All dimensions are in inches unless otherwise specified.

A. Cracks
(1) Cracks in any fitting or forging are not allowed. Cracked fittings or forgings must be replaced.
(2) Cracks in components other than fittings and forgings are considered allowable if properly repaired and refinished in accordance with 51-70-00.

B. Deformation
(1) Deformation of the delta fin assemblies are not allowed. Contact Learjet Engineering for assistance.

C. Corrosion (See Figure 101.)
(1) Corrosion damage is permissible if the affected area is properly repaired, refinished in accordance with 51-30-15 and these repairs do not reduce the original material thickness more than specified. (Refer to 51-70-00.) After repairs, the remaining skin thickness must be measured to make sure thickness of material is per allowable limits.
(2) Structural components must be repaired or replaced if corrosion repair reduces the original material thickness below 0.016 inch, contact Learjet Engineering for assistance.

D. Dents
(1) Dents less than 0.050 in depth are considered cosmetic, therefore are structurally acceptable provided they are smooth and without abrupt changes in contour, no cracks (verified by eddy current inspection) or delaminations (verified by tap test), are present.
(2) Dents greater than 0.050 in depth are structurally acceptable, if smooth and without abrupt changes in contour, no cracks (verified by eddy current inspection) or delaminations (verified by tap test) are present, and are filled using an aerodynamic filler. It is acceptable to use any of the following compounds to fill the dents: EPIBOND 1337-A/9615-A, SCOTCH-WELD epoxy adhesive 1751 B/A gray, DMS-4-828 epoxy adhesive.
(3) Dents are not allowed if sharp, or if a fracture of the skin has occurred, or if delamination of the outer skin core has occurred, or if a penetration has occurred. Contact Learjet Engineering for assistance.

E. Scratches (See Figure 101.)
(1) Scratches are permissible if the affected area is sanded smooth, refinished in accordance with 51-70-00, and the repairs do not reduce the original material thickness more than specified. (Refer to 51-30-15 for protective treatment procedures.)
(2) Structural components must be replaced or repaired if scratches reduce the original material thickness below allowable limits.

F. Nicks (See Figure 101.)
   (1) Nicks are permissible if the affected area is sanded smooth, refinished in accordance with 51-70-00, and the repairs do not reduce the original material thickness below allowable limits. (Refer to 51-30-15 for protective treatment procedures.)
   (2) Structural components must be replaced or repaired if nicks reduce the original material thickness below allowable limits.

G. Fittings and Forgings
   (1) Fittings or forgings must be replaced if cracked or if fitting hole (non-bushed) tolerance exceeds the allowable limits. (Refer to 51-70-00.)
   (2) Fittings or forgings with bushing must be repaired.

DELTA FIN ASSEMBLY - REPAIR

1. Repairs

A. Refer to 51-70-00 for typical repairs and allowable wear and repair data.

AFT FUSELAGE ASSEMBLY - STRUCTURAL IDENTIFICATION

1. Description (See Figure 1 and Table 1.)

A. The aft fuselage assembly consists of the structure assembly from FS 504 to FS 614. The structure consists of major bulkhead/frame assemblies, stringers, skins and structural subassemblies.

B. The aft fuselage assembly provides mounting provisions for various aircraft systems and passenger support equipment including hydraulic accumulator and plumbing, air cycle machine, APU (if installed), and electrical bay.

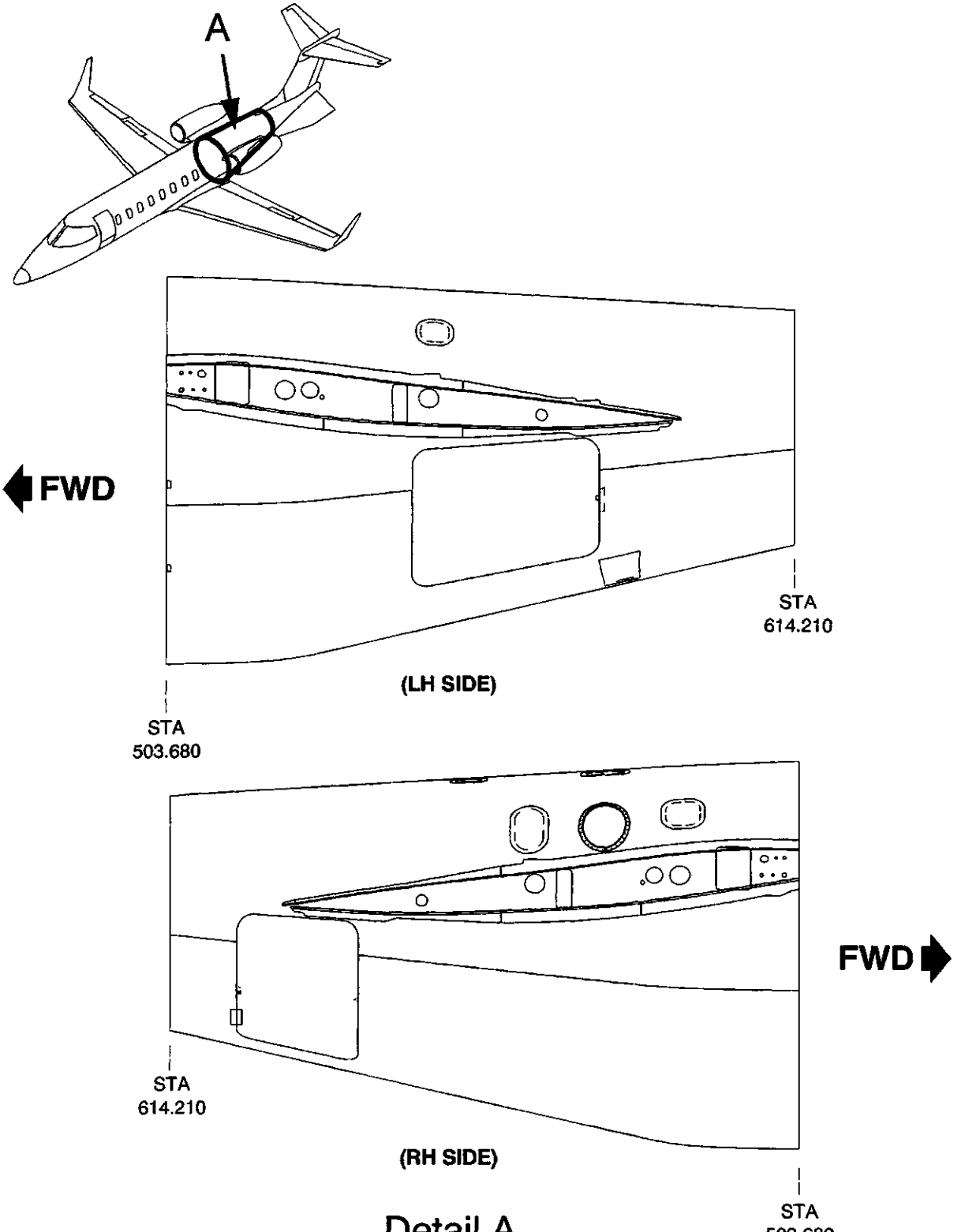

Detail A

S45-534000-001-01

Aft Fuselage Assembly Repair Index
Figure 1 (Sheet 1 of 13)

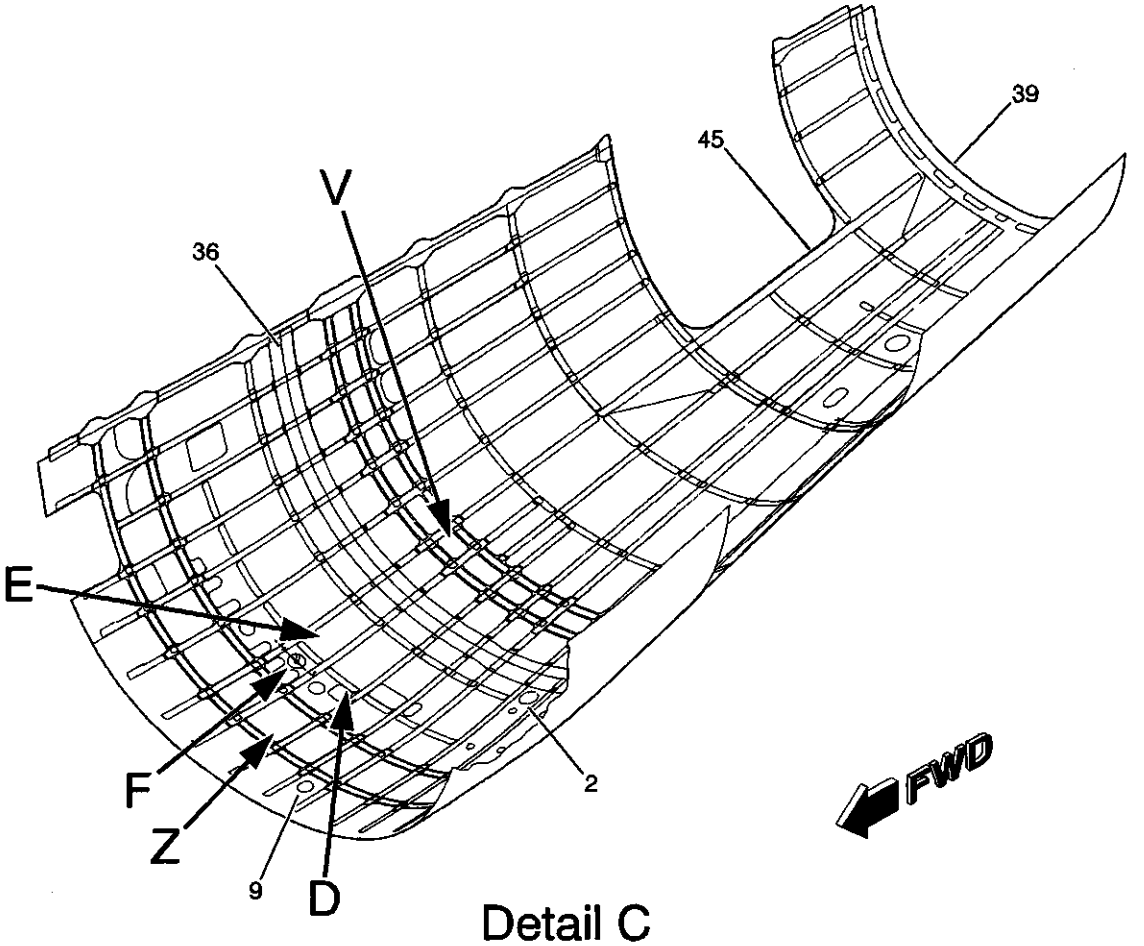

Detail C

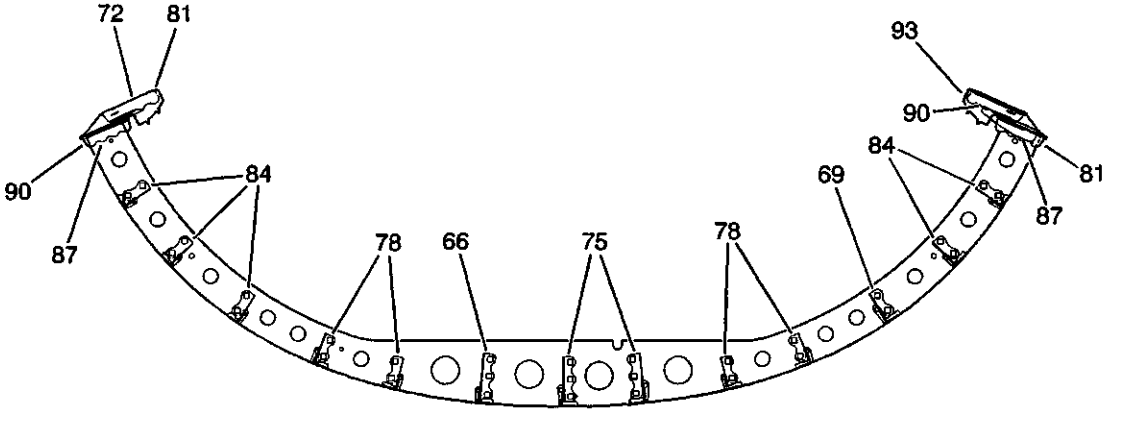

(VIEW LOOKING AFT ON STA 524.850)

Detail D

S45-534000-001-02

Aft Fuselage Assembly Repair Index
Figure 1 (Sheet 2 of 13)

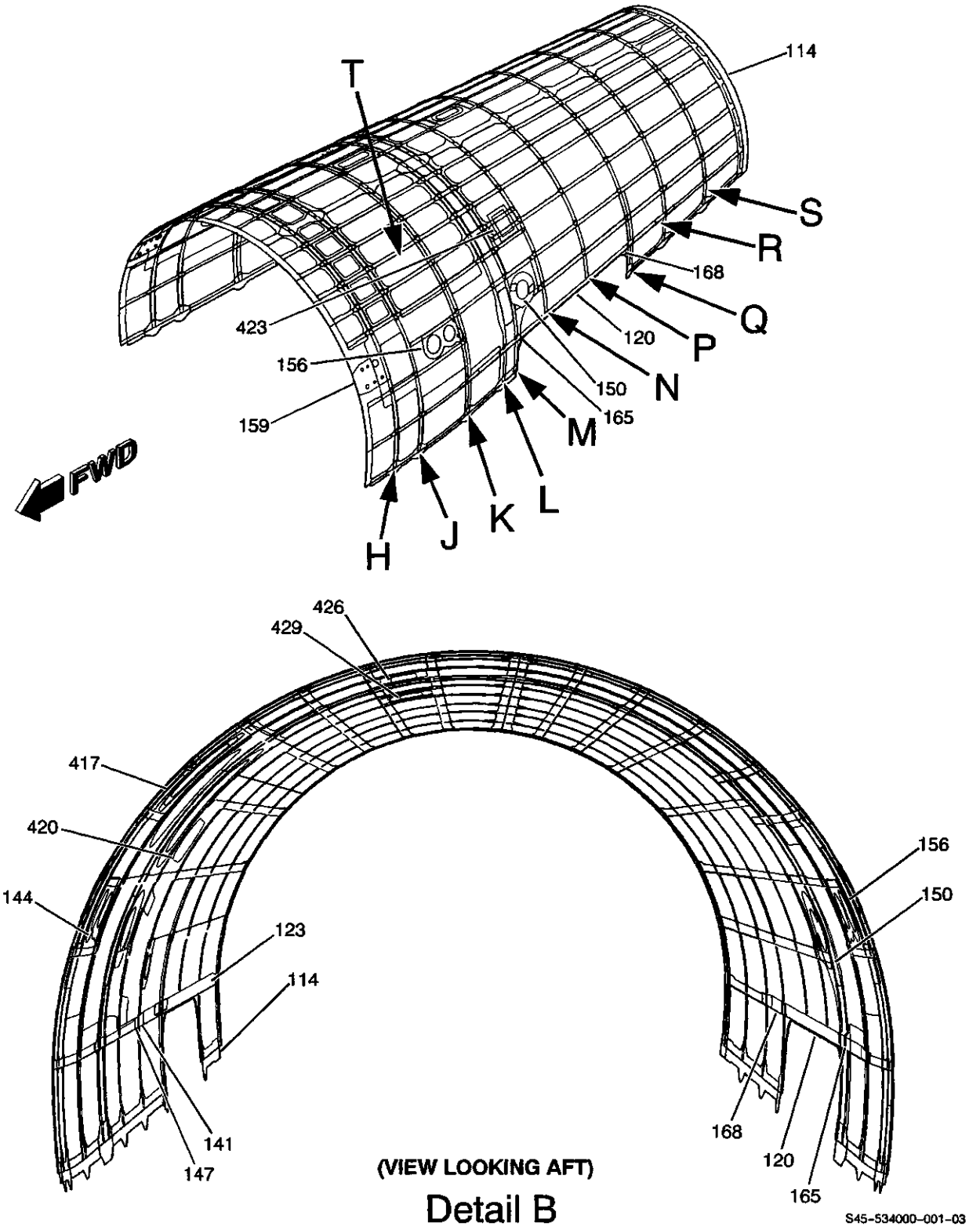

Detail B

Aft Fuselage Assembly Repair Index
Figure 1 (Sheet 3 of 13)

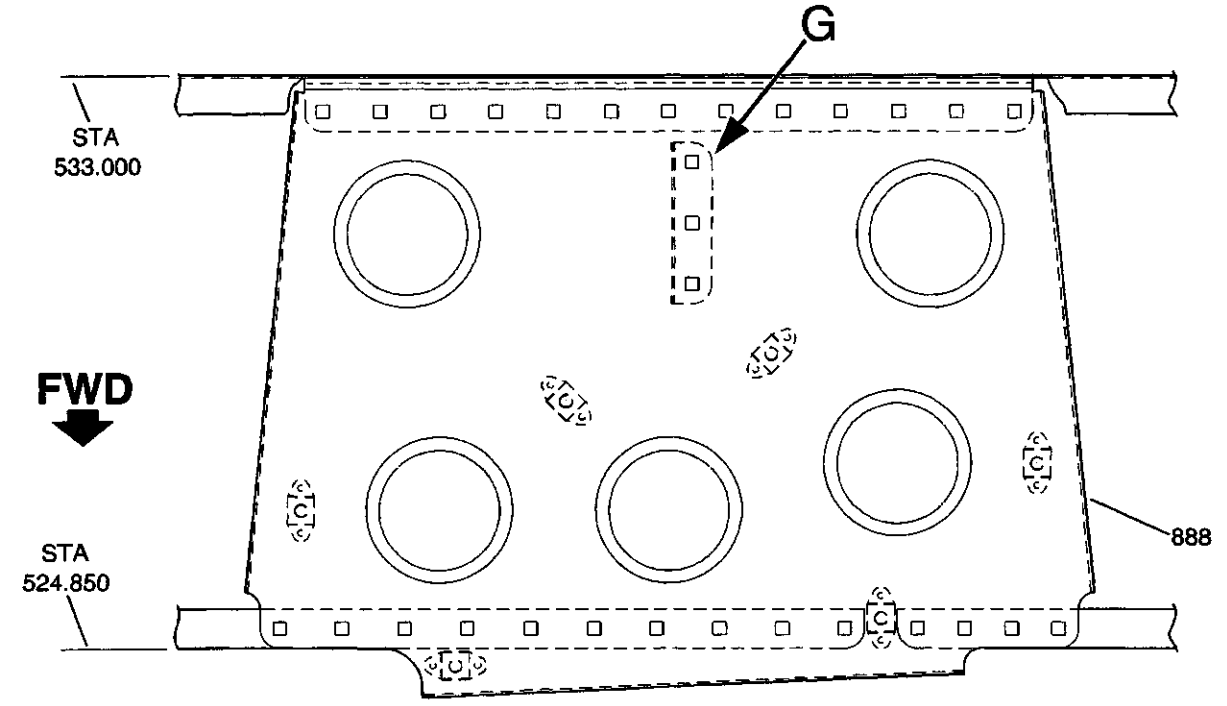

(VIEW LOOKING DOWN)

Detail E

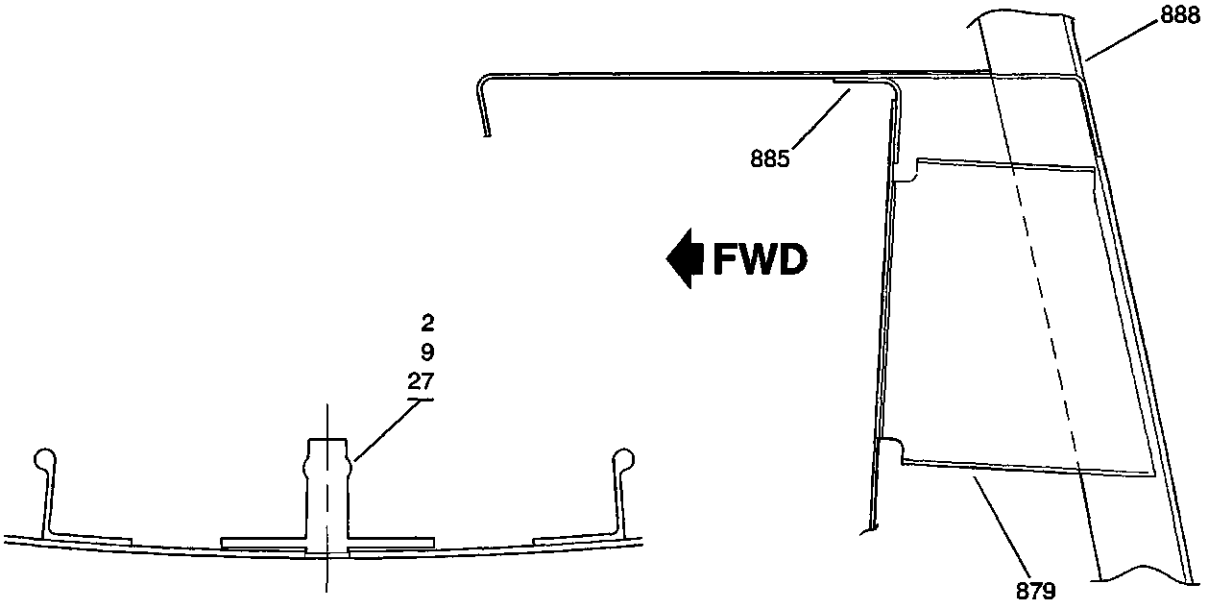

(VIEW LOOKING AFT)

Detail F

(VIEW LOOKING RIGHT)

Detail G

S45-534000-001-04

Aft Fuselage Assembly Repair Index
Figure 1 (Sheet 4 of 13)

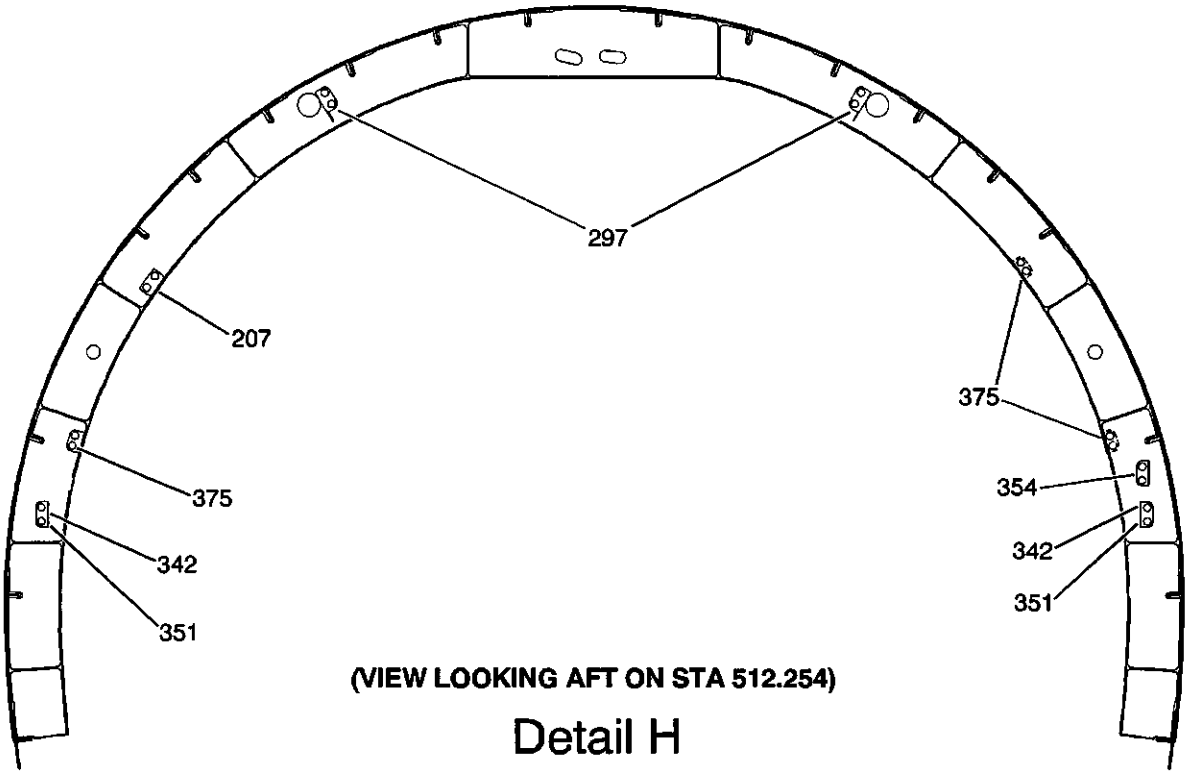

(VIEW LOOKING AFT ON STA 512.254)

Detail H

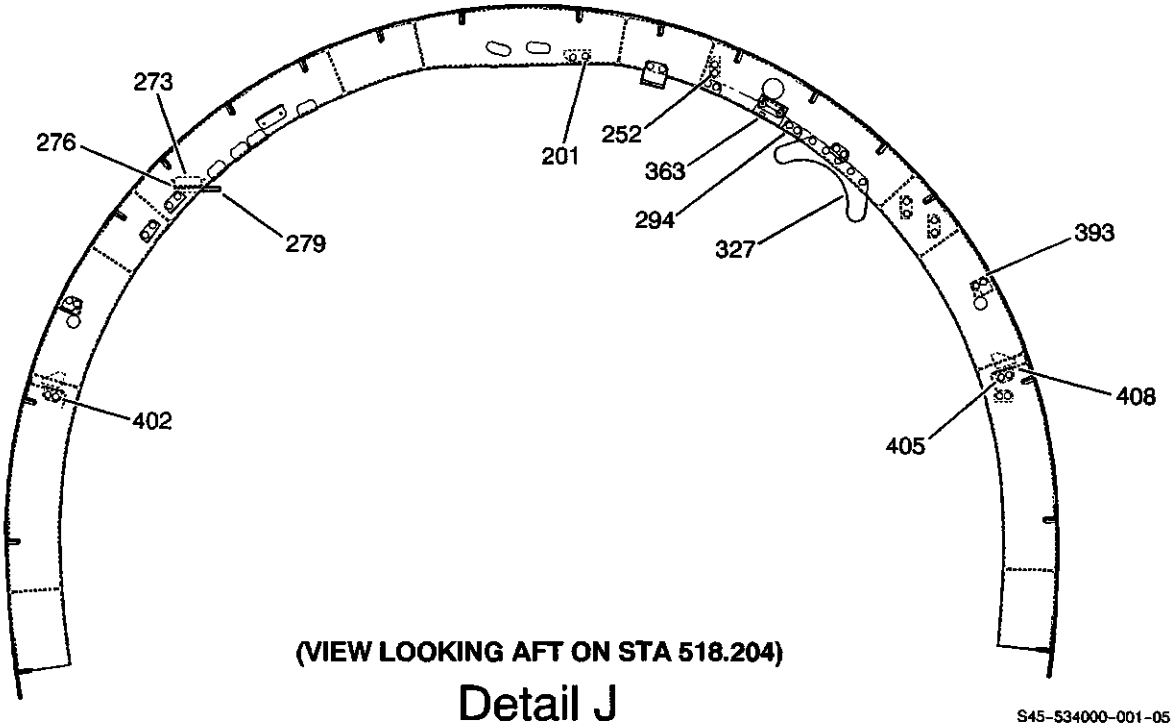

(VIEW LOOKING AFT ON STA 518.204)

Detail J

S45-534000-001-05

Aft Fuselage Assembly Repair Index
Figure 1 (Sheet 5 of 13)

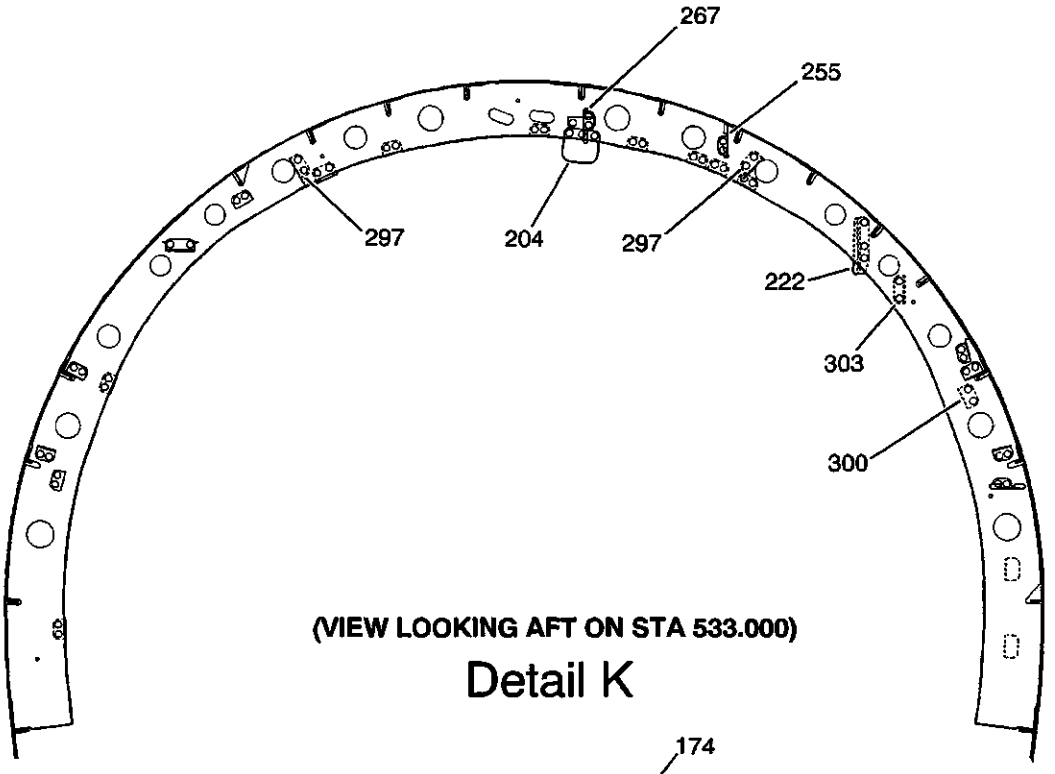

(VIEW LOOKING AFT ON STA 533.000)

Detail K

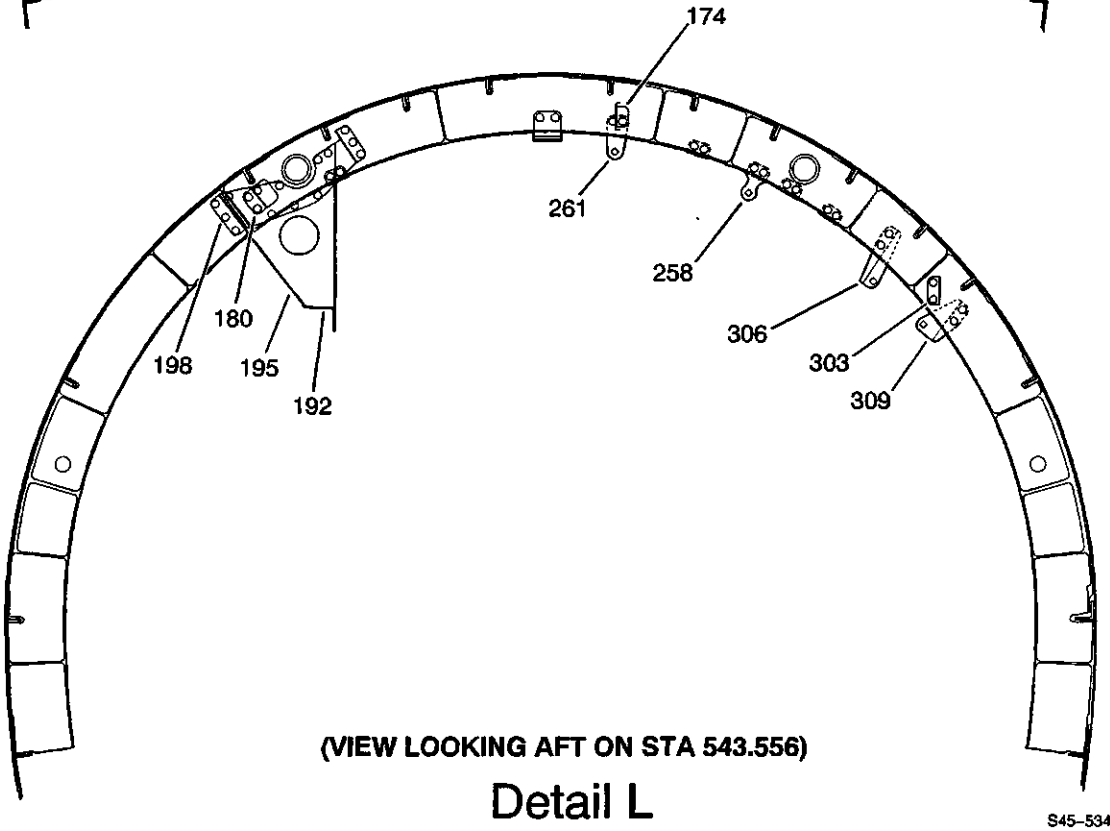

(VIEW LOOKING AFT ON STA 543.556)

Detail L

S45-534000-001-06

Aft Fuselage Assembly Repair Index
Figure 1 (Sheet 6 of 13)

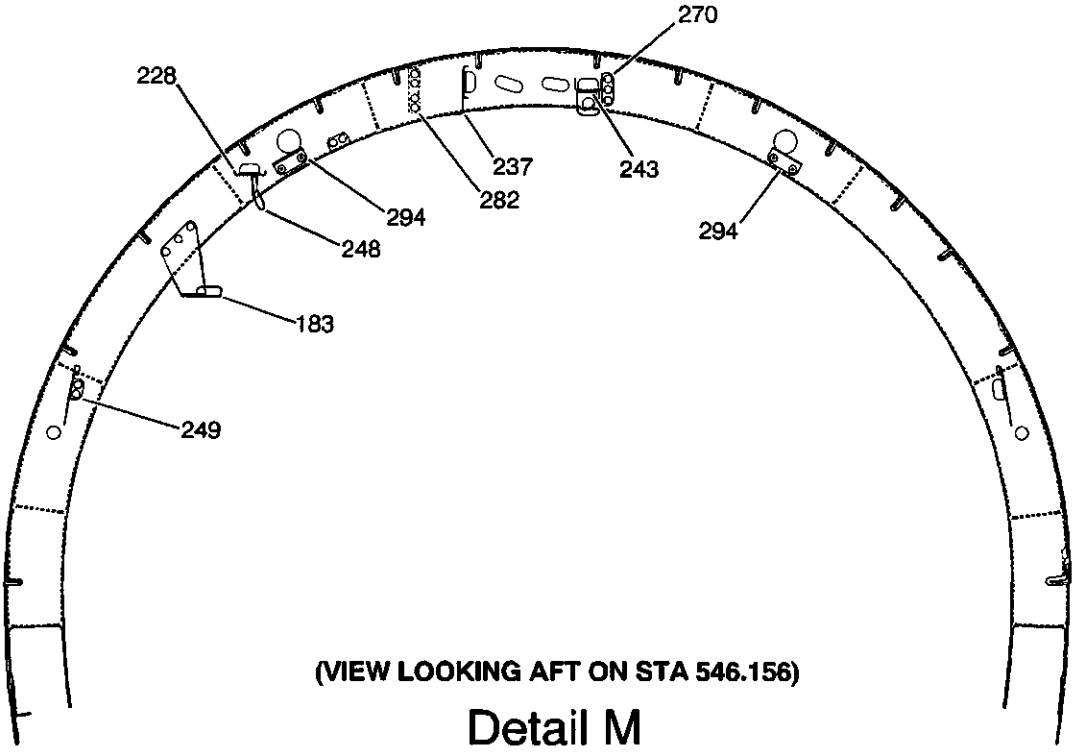

(VIEW LOOKING AFT ON STA 546.156)

Detail M

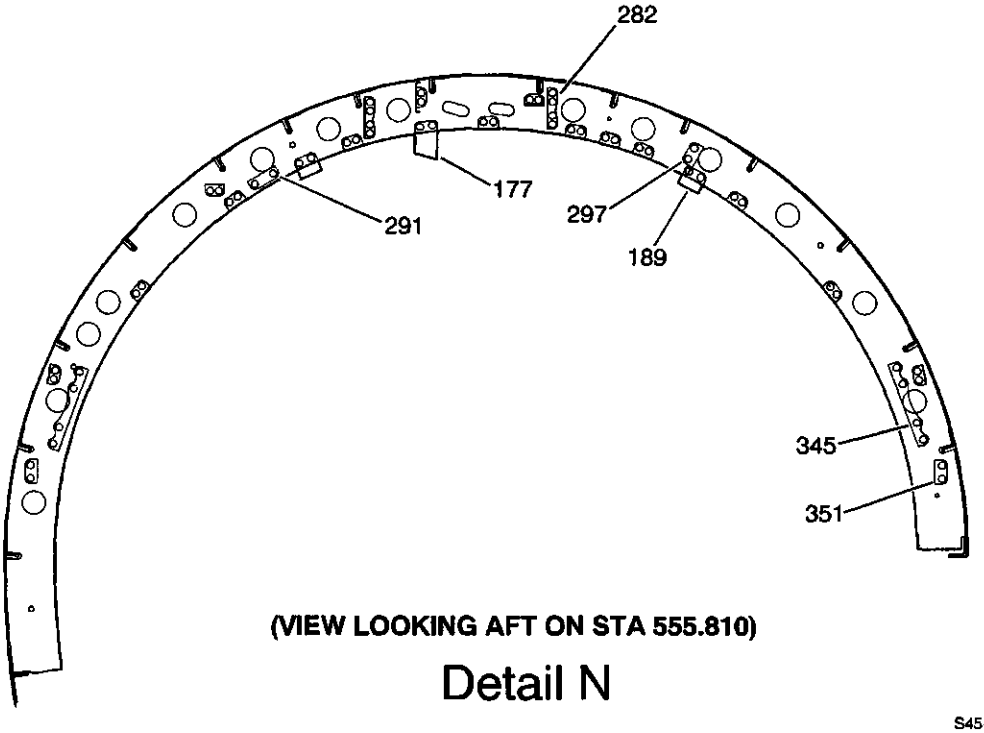

(VIEW LOOKING AFT ON STA 555.810)

Detail N

S45-534000-001-07

Aft Fuselage Assembly Repair Index
Figure 1 (Sheet 7 of 13)

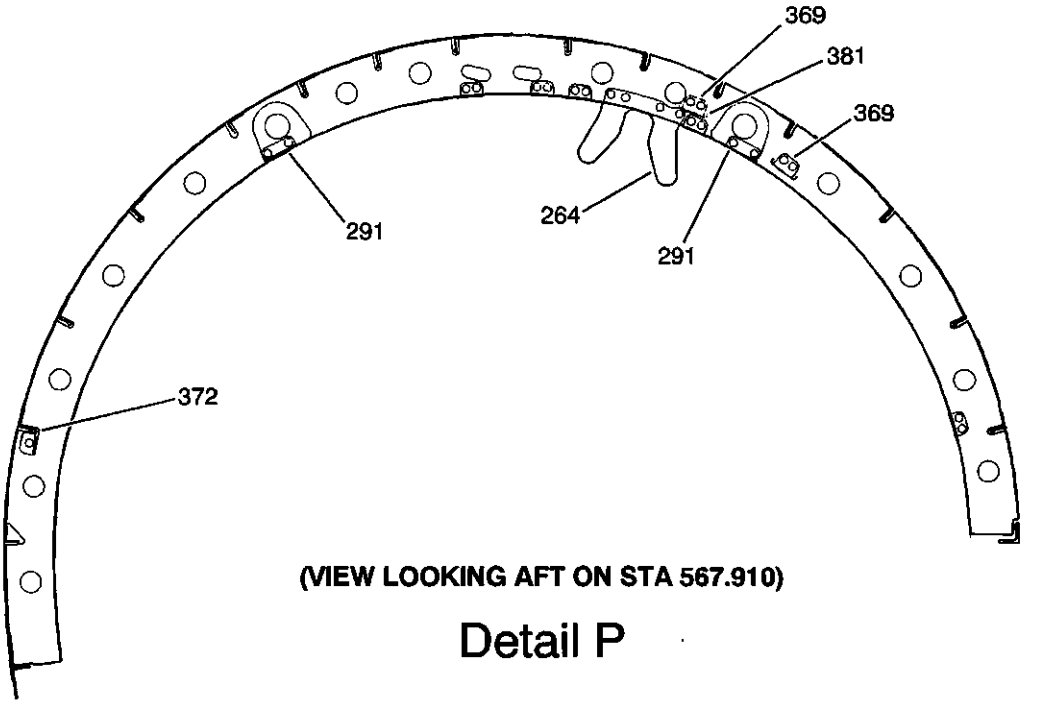

(VIEW LOOKING AFT ON STA 567.910)

Detail P

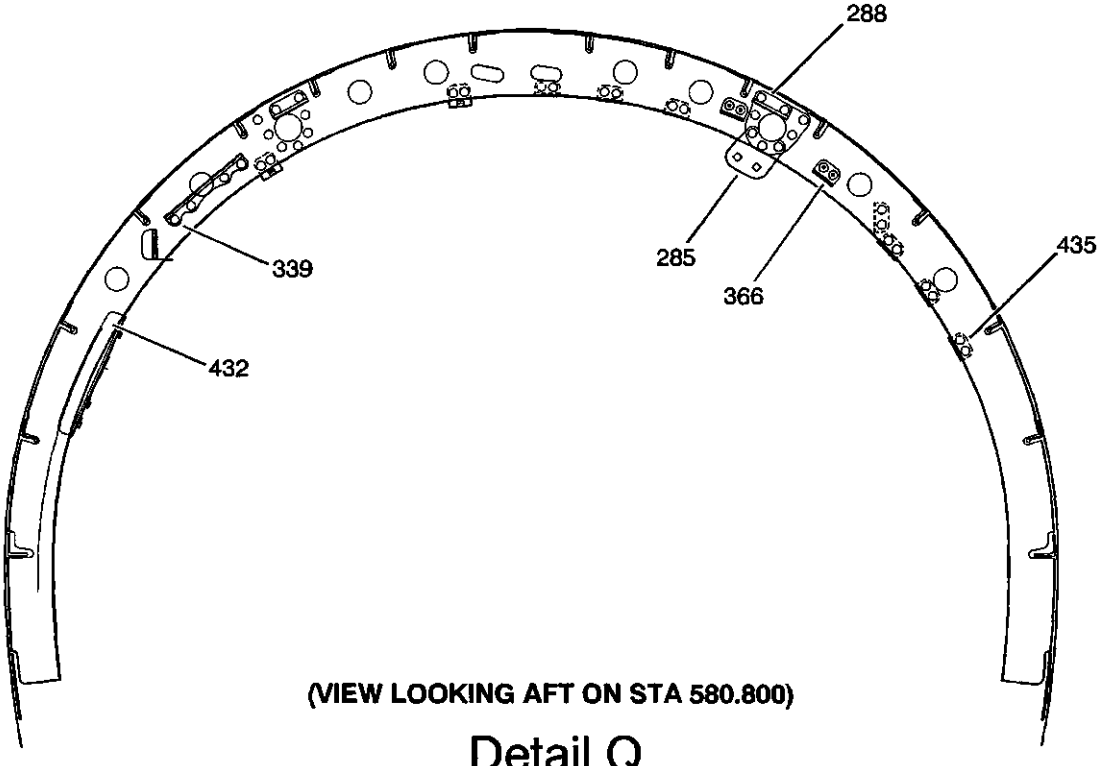

(VIEW LOOKING AFT ON STA 580.800)

Detail Q

S45-534000-001-08

Aft Fuselage Assembly Repair Index
Figure 1 (Sheet 8 of 13)

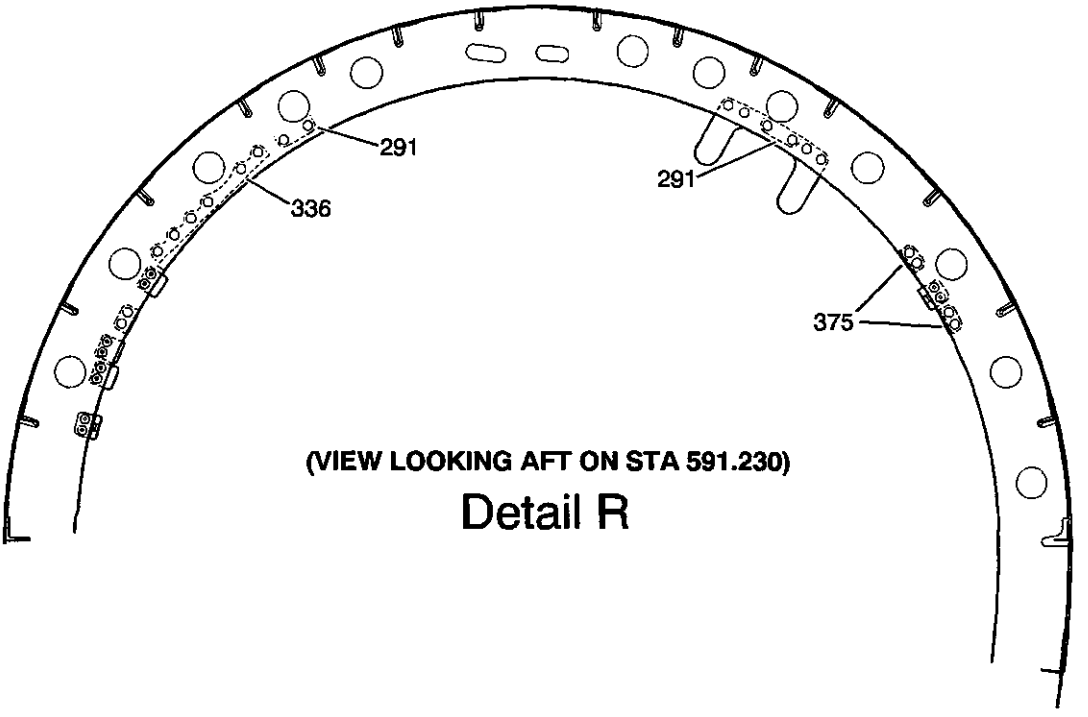

(VIEW LOOKING AFT ON STA 591.230)

Detail R

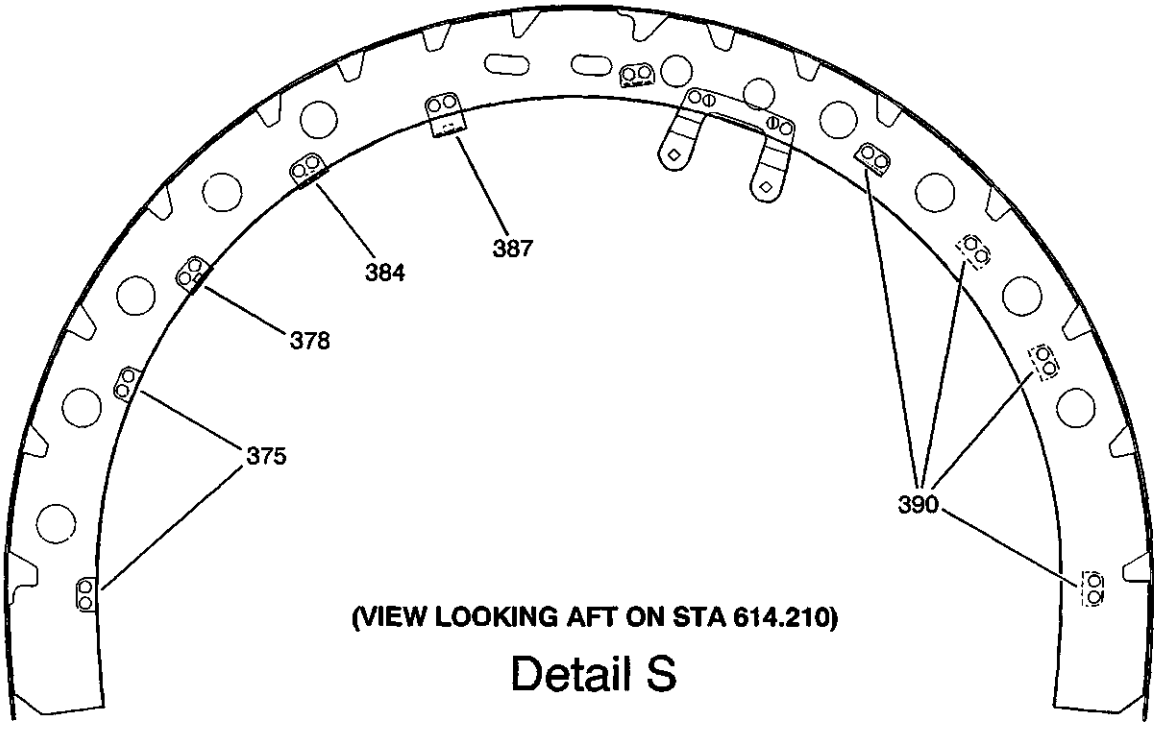

(VIEW LOOKING AFT ON STA 614.210)

Detail S

S45-534000-001-09

Aft Fuselage Assembly Repair Index
Figure 1 (Sheet 9 of 13)

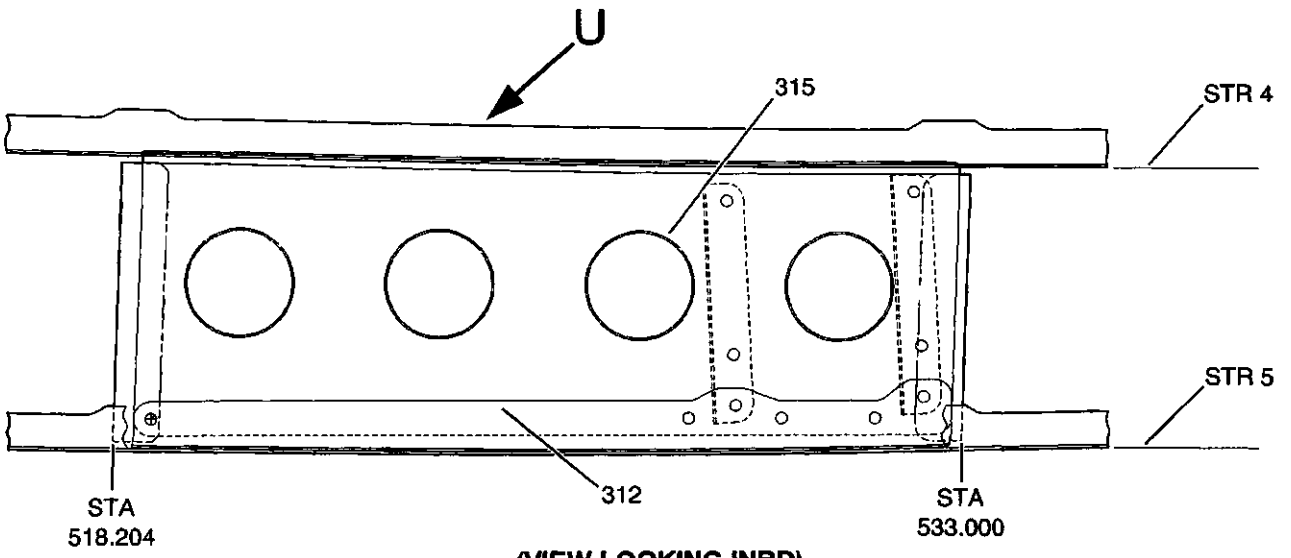

(VIEW LOOKING INBD)

FWD

Detail T

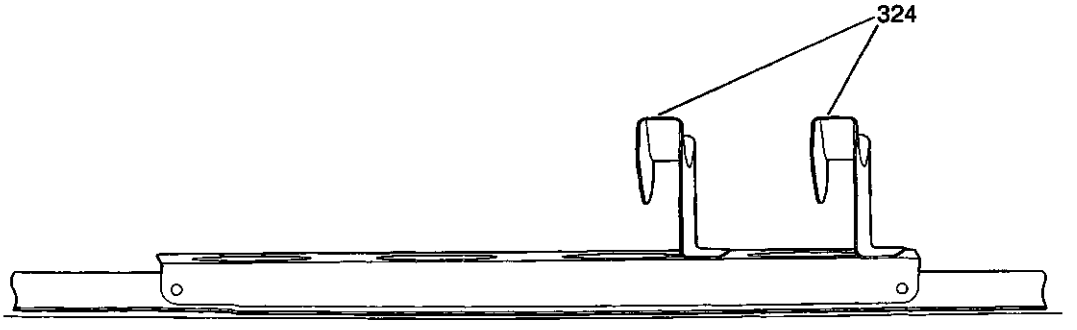

(VIEW LOOKING DOWN)

Detail U

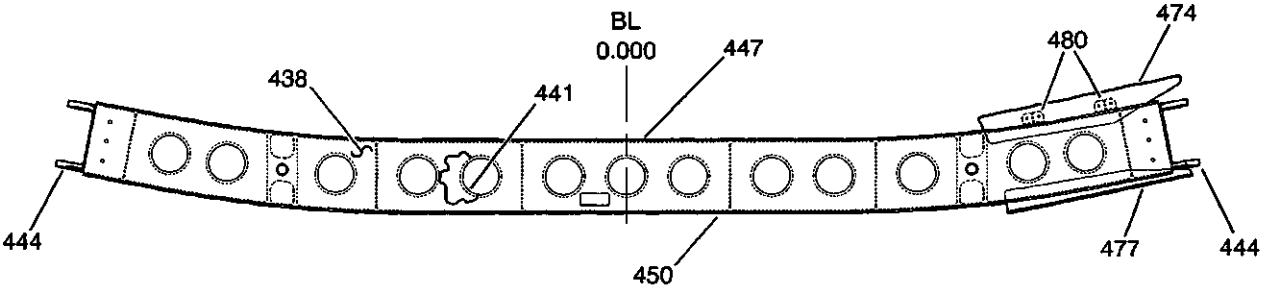

AFT ENGINE BEAM ASSEMBLY
(VIEW LOOKING AFT)

Detail V

S45-534000-001-10

Aft Fuselage Assembly Repair Index
Figure 1 (Sheet 10 of 13)

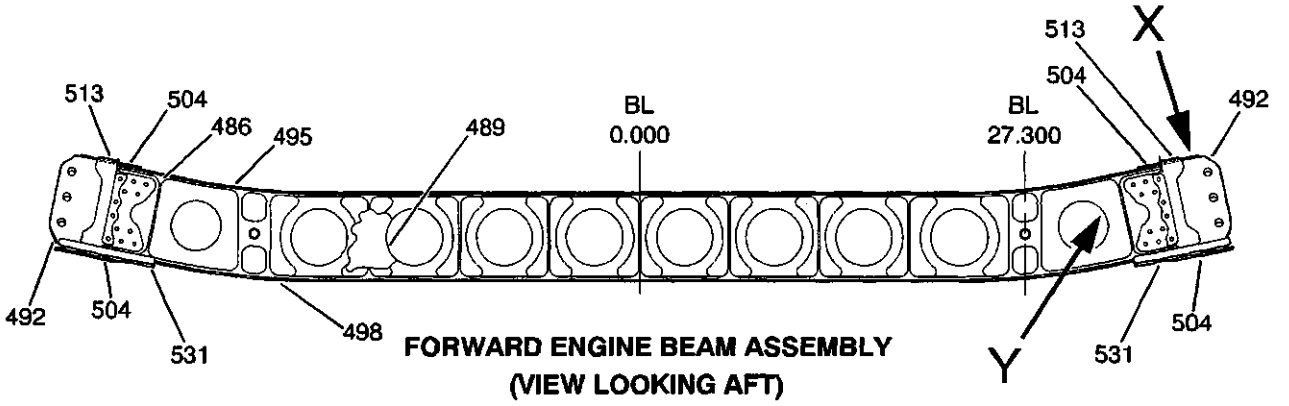

FORWARD ENGINE BEAM ASSEMBLY
(VIEW LOOKING AFT)

Detail W

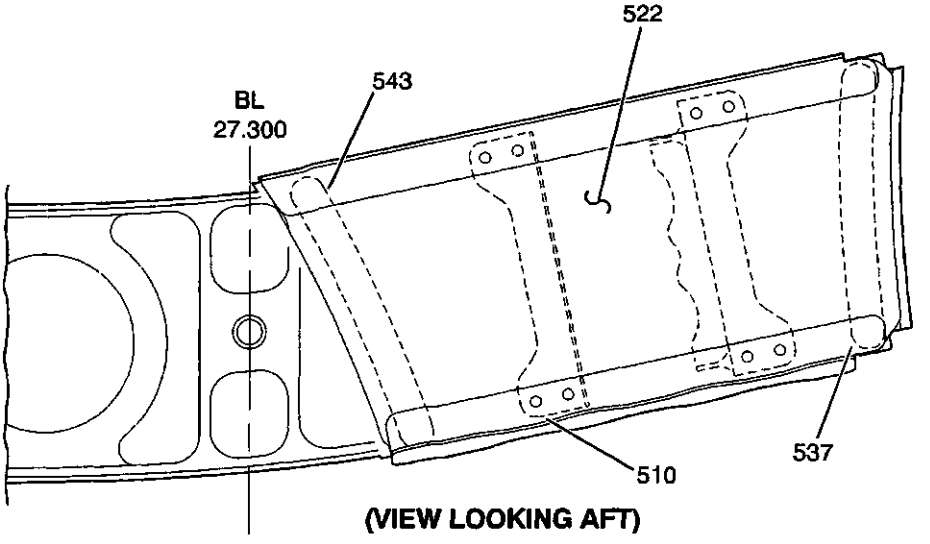

(VIEW LOOKING AFT)

Detail X

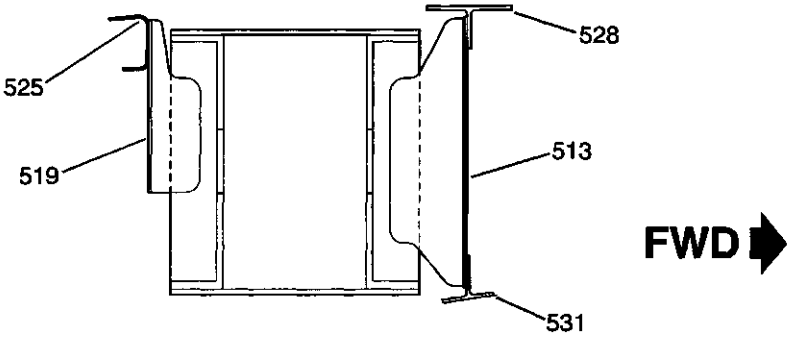

(VIEW LOOKING LEFT)

Detail Y

S45-534000-001-11

Aft Fuselage Assembly Repair Index
Figure 1 (Sheet 11 of 13)

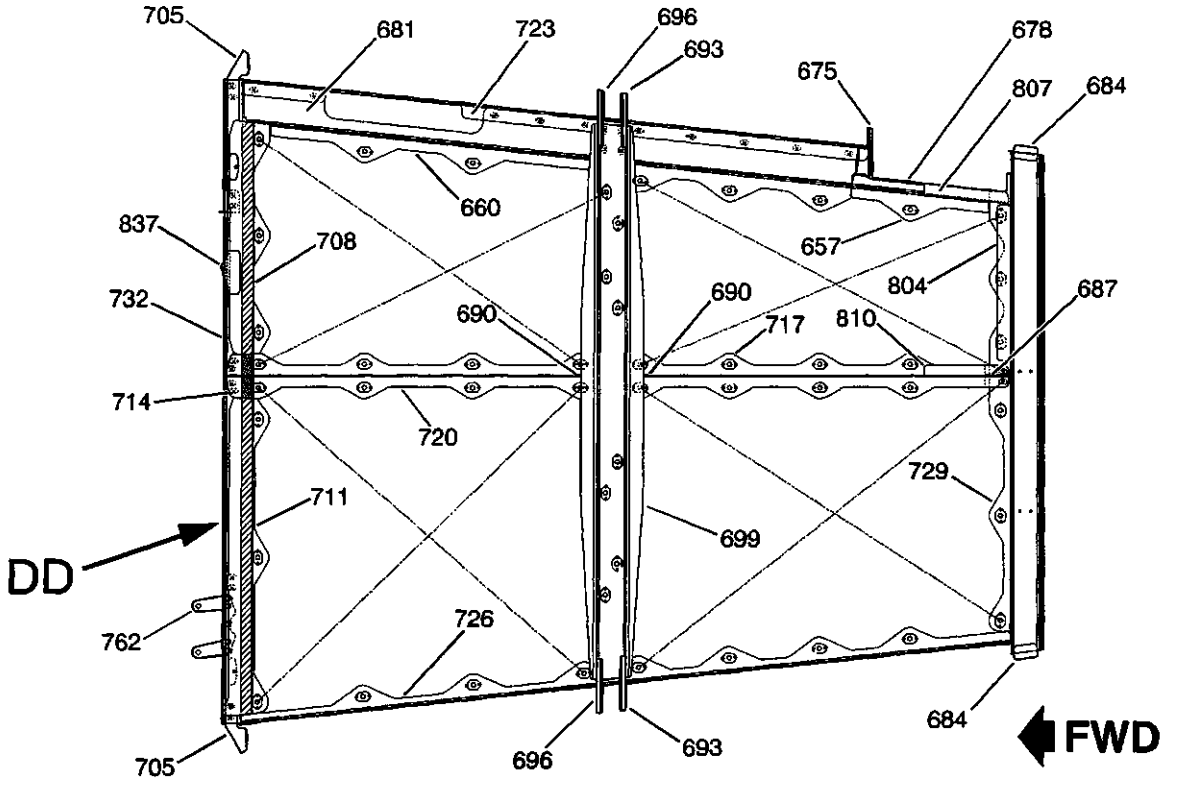

(VIEW LOOKING DOWN ON BAGGAGE BAY)

Detail CC

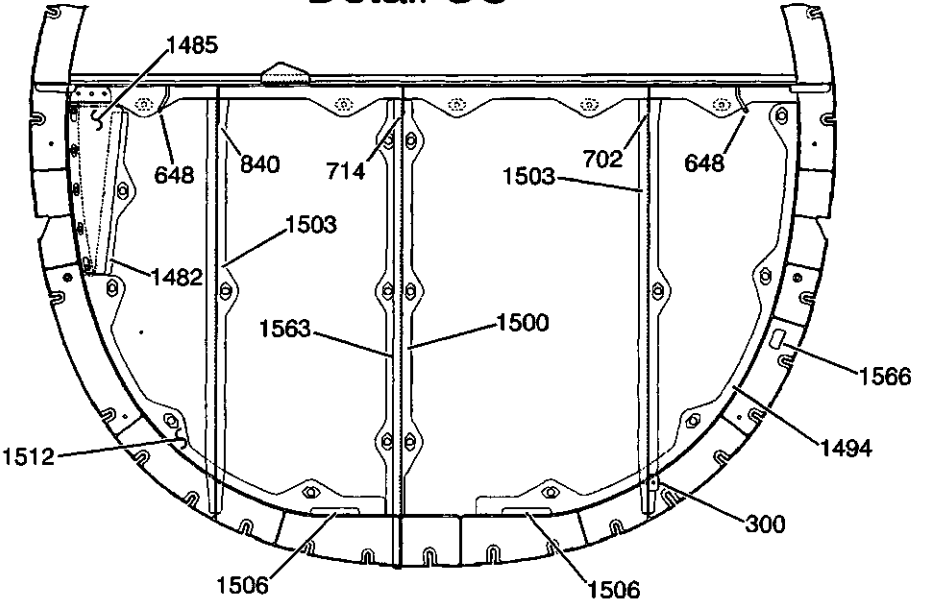

(VIEW LOOKING AFT)

Detail DD

S45-534000-001-12

Aft Fuselage Assembly Repair Index
Figure 1 (Sheet 12 of 13)

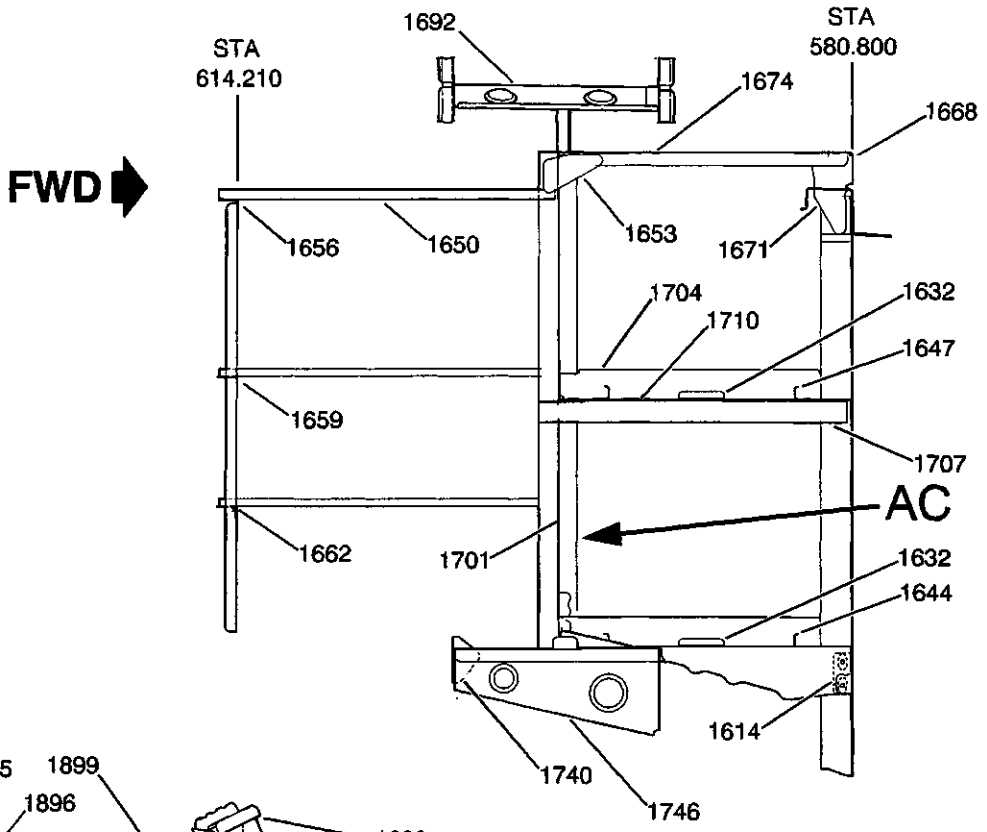

(VIEW ON RIGHT HAND SIDE LOOKING INBOARD)

Detail AB

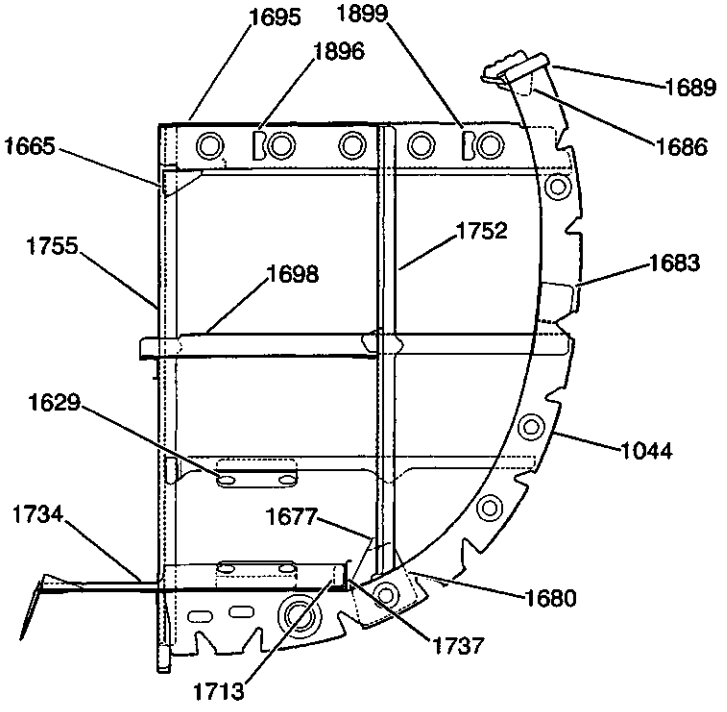

(VIEW LOOKING AFT ON FRAME AT STA 596.790)

Detail AC

S45-534000-001-13

Aft Fuselage Assembly Repair Index
Figure 1 (Sheet 13 of 13)

ITEM NO.	DWG. NO.	DESCRIPTION	EFF CODE	MATERIAL	GAGE	FINISH CODE	REPAIR FIG. NO.
	4553005001	Aft Fuselage Assembly	1	-	-	-	-
		• Refer To 53-40-10 for Aft Fuselage Frames					
		• Refer To 53-40-20 for Aft Fuselage Stringers					
		• Refer To 53-40-40 for Aft Fuselage Skins					
-	4553005002	• Lower Panel Assy.	1	-	-	-	-
2	4536102261	• • Adapter Assy., Vent	1	-	-	-	-
3	4536102259	• • • Tube, Vent Adapter	1	6061-T4	[1]	F1-10	Replace
-	4536102260	• • • Plate, Vent Adapter	1	6061-T4	0.080	F1-10	Replace
9	4521202268	• • Adapter Assy., Plenum Drain	1	-	-	-	-
-	4536102033	• • • Duct Assembly	1	[2]		F1-10	Replace
27	4521502054	• • Adapter Assy., Pack Drain	1	-	-	[5]	-
-	4521502053	• • • Tube	1	6061-T4	[1]	F1-10	Replace
-	4536102260	• • • Plate	1	6061-T4	0.080	F1-10	Replace
36	4553508009	• • Buttstrap FS 537.00	1	2024-T3 Clad	0.050	F3-8	Replace
39	4553508008	• • Buttstrap FS 614.21	1	2024-T3 Clad	0.050	F3-8	Replace
42	4553507047	• • Longeron, Baggage Bay	1	2024-T8511[6]	1.000	F3-8	Replace
45	4553507045	• • Longeron, Tailcone Door	1	2024-T8511[6]	1.000	F3-8	Replace
-	4553504813	• • Doubler FS 602.46	1	2024-T42 Clad	0.040	F3-8	Replace
-	4553504806	• • Packer FS602.46	1	2024-T3 Clad	0.063	F3-8	Replace
66	4553504038	• • Cleat	1	2024-T3 Clad	0.050	F3-8	Replace
69	4553504037	• • Cleat	1	2024-T3 Clad	0.050	F3-8	Replace
72	4553504036	• • Intercostal, RH	1	2024-T42 Clad	0.040	F3-8	Replace
75	4553504035	• • Cleat	1	2024-T3 Clad	0.050	F3-8	Replace
78	4553504033	• • Cleat	1	2024-T3 Clad	0.050	F3-8	Replace
81	4553504032	• • Cleat, LH & RH FS 533.00	1	2024-T3 Clad	0.040	F3-8	Replace
84	4553504031	• • Cleat (5 ea.)	1	2024-T3 Clad	0.040	F3-8	Replace
87	4553504030	• • Cleat FS 524.85	1	2024-T3 Clad	0.040	F3-8	Replace
90	4553504029	• • Cleat FS 518.20	1	2024-T3 Clad	0.040	F3-8	Replace
93	4553504027	• • Intercostal, LH	1	2024-T42 Clad	0.040	F3-8	Replace
		- Not Illustrated					

Aft Fuselage Assembly Repair Index
Table 1 (Sheet 1 of 27)

ITEM NO.	DWG. NO.	DESCRIPTION	EFF CODE	MATERIAL	GAGE	FINISH CODE	REPAIR FIG. NO.
96	4553504607	• • Cleat (2 ea.)	1	2024-T42 Clad	0.040	F3-8	Replace
-	4552405142	• • Doubler, Lanyard Anchor	2	2024-T42 Clad	0.040	F3-8	Replace
-	4552405143	• • Splice Angle, Lanyard Anchor	2	2024-T42 Clad	0.050	F3-8	Replace
-	4529202011	• • Bracket FS 511.50	1	2024-T3 Clad	0.032	F3-8	Replace
-	4552405168	• • Cleat, Lanyard Support FS 580.80	3	7075-T76 Clad	0.080	F3-8	Replace
-	4553005004	• Top Panel Assy.	1	-	-	-	-
-	4553005006	• • Upper Panel Assy.	1	-	-	-	-
114	4553508007	• • • Buttstrap FS 614.21	1	2024-T3 Clad	0.050	F3-8	Replace
-	4553507064	• • • Packer FS 533	1	2024-T3 Clad	0.032	F3-8	Replace
120	4553507046	• • • Longeron, Upper Baggage Bay Door	1	2024-T8511 [7]		F3-8	Replace
123	4553507044	• • • Longeron, Upper Tailcone	1	2024-T8511 [7]		F3-8	Replace
-	4553504658	• • • Doubler, RH Upper	1	2024-T42 Clad	0.040	F3-8	Replace
-	4553504657	• • • Doubler, LH Upper	1	2024-T42 Clad	0.040	F3-8	Replace
141	4552405065	• • • Angle, Reinforcement	1	2024-T42 Clad	0.080	F3-8	Replace
144	4553508034	• • • Doubler, RH FS 527.00	1	2024-T3 Clad	0.080	F3-8	Replace
147	4553508033	• • • Doubler, RH FS 569.00	2	2024-T3 Clad	0.032	F3-8	Replace
150	4553508032	• • • Doubler, Outer FS 550.00 (2 ea.)	1	[8]	0.036	F1-10	Replace
-	4553508031	• • • Doubler, Inner FS 550.00 (2 ea.)	1	[8]	0.036	F1-10	Replace
156	4553508030	• • • Doubler, LH FS 527	1	2024-T3 Clad	0.080	F3-8	Replace
159	4553508029	• • • Plate, Doubler (2 ea.)	1	2024-T3 Clad	0.050	F3-8	Replace
-	4553504807	• • • Packer 2 FS 602.46	1	2024-T3 Clad	0.050	F3-8	Replace
165	4552300088	• • • Angle	1	2024-T42 Clad	0.080	F3-8	Replace
168	4552300087	• • • Angle	1	2024-T42 Clad	0.080	F3-8	Replace
-	4536102204	• • • Packer 1, HP Bleed Air	1	2024-T3 Clad	0.050	F3-8	Replace
174	4536102203	• • • Cleat 1, HP Bleed Air (18 ea.)	1	2024-T3 Clad	0.032	F3-8	Replace
177	4536102202	• • • Bracket, Servo Air	1	2024-T3 Clad	0.032	F3-8	Replace
180	4520008464	• • • Bracket, Servo Air	1	2024-T3 Clad	0.032	F3-8	Replace
		- Not Illustrated					

Aft Fuselage Assembly Repair Index
Table 1 (Sheet 2 of 27)

ITEM NO.	DWG. NO.	DESCRIPTION	EFF CODE	MATERIAL	GAGE	FINISH CODE	REPAIR FIG. NO.
183	4536102200	• • • Bracket, Servo Air	1	2024-T3 Clad	0.040	F3-8	Replace
-	4536102199	• • • Bracket, Servo Air	1	2024-T3 Clad	0.040	F3-8	Replace
189	4536102197	• • • Bracket, Servo Air (2 ea.)	1	4	0.032	F1-10	Replace
192	4536102196	• • • Bracket, Servo Air	1	2024-T3 Clad	0.040	F3-8	Replace
195	4536102195	• • • Bracket, Servo Air	1	2024-T42 Clad	0.040	F3-8	Replace
198	4536102194	• • • Bracket, Servo Air	1	2024-T3 Clad	0.032	F3-8	Replace
201	4536102190	• • • Bracket (2 ea.)	1	2024-T3 Clad	0.032	F3-8	Replace
204	4536102188	• • • Bracket	1	2024-T3 Clad	0.032	F3-8	Replace
207	4536102187	• • • Bracket	1	2024-T3 Clad	0.032	F3-8	Replace
210	4536102186	• • • Bracket	1	2024-T3 Clad	0.032	F3-8	Replace
-	4536102184	• • • Bracket	1	2024-T3 Clad	0.032	F3-8	Replace
-	4536102183	• • • Bracket	1	2024-T3 Clad	0.032	F3-8	Replace
-	4536102182	• • • Bracket	1	2024-T3 Clad	0.040	F3-8	Replace
222	4536102172	• • • Bracket, LP Bleed Air	1	2024-T3 Clad	0.040	F3-8	Replace
225	4536102170	• • • Bracket, HP Bleed Air	1	2024-T3 Clad	0.040	F3-8	Replace
228	4536102169	• • • Bracket, HP Bleed Air	1	2024-T3 Clad	0.032	F3-8	Replace
-	4536102168	• • • Bracket, HP Bleed Air	1	4	0.040	F1-10	Replace
-	4536102167	• • • Bracket, HP Bleed Air	1	2024-T3 Clad	0.040	F3-8	Replace
237	4536102166	• • • Bracket, HP Bleed Air (3 ea.)	1	2024-T3 Clad	0.032	F3-8	Replace
240	4536102165	• • • Bracket, HP Bleed Air	1	4	0.020	F1-10	Replace
243	4536102164	• • • Bracket, HP Bleed Air	1	2024-T3 Clad	0.040	F3-8	Replace
-	4536102163	• • • Bracket, HP Bleed Air	1	2024-T3 Clad	0.032	F3-8	Replace
249	4536102162	• • • Bracket, HP Bleed Air	1	4	0.028	F1-10	Replace
252	4530102065	• • • Cleat, Anti-Ice	1	2024-T3 Clad	0.032	F3-8	Replace
255	4530102062	• • • Bracket, Anti-ice	1	2024-T3 Clad	0.032	F3-8	Replace
258	4530102058	• • • Bracket, Anti-ice	1	2024-T3 Clad	0.032	F3-8	Replace
261	4530102057	• • • Bracket, Anti-ice	1	2024-T3 Clad	0.032	F3-8	Replace
264	4530102056	• • • Bracket, Anti-ice (2 ea.)	1	4	0.020	F1-10	Replace
267	4530102055	• • • Bracket, Anti-ice (2 ea.)	1	2024-T3 Clad	0.032	F3-8	Replace
270	4530102054	• • • Bracket, Anti-ice (2 ea.)	1	2024-T3 Clad	0.032	F3-8	Replace
273	4530102236	• • • Cleat, HP Bleed Air (2 ea.)	1	2024-T3 Clad	0.040	F3-8	Replace
276	4530102237	• • • Bracket, HP Bleed Air	1	2024-T3 Clad	0.040	F3-8	Replace
		- Not Illustrated					

Aft Fuselage Assembly Repair Index
Table 1 (Sheet 3 of 27)

ITEM NO.	DWG. NO.	DESCRIPTION	EFF CODE	MATERIAL	GAGE	FINISH CODE	REPAIR FIG. NO.
279	4530102238	• • • Bracket, HP Bleed Air	1	2024-T3 Clad	0.040	F3-8	Replace
282	4530102053	• • • Bracket, Anti-ice (3 ea.)	1	2024-T3 Clad	0.032	F3-8	Replace
285	4530102051	• • • Bracket, Anti-ice	1	[4]	0.028	F1-10	Replace
288	4526202011	• • • Bracket, LH & RH	1	2024-T3 Clad	0.032	F3-8	Replace
291	4526202010	• • • Bracket (5 ea.)	1	2024-T3 Clad	0.032	F3-8	Replace
294	4526202009	• • • Bracket (6 ea.)	1	2024-T3 Clad	0.032	F3-8	Replace
297	4526202008	• • • Bracket (5 ea.)	1	2024-T3 Clad	0.032	F3-8	Replace
300	4521302104	• • • Bracket (6 ea.)	1	2024-T3 Clad	0.032	F3-8	Replace
303	4521202209	• • • Cleat, Water Separator Inlet	1	2024-T3 Clad	0.032	F3-8	Replace
306	4521202208	• • • Bracket, Water Separator Inlet	1	2024-T3 Clad	0.032	F3-8	Replace
309	4521202207	• • • Bracket, Water Separator Inlet	1	2024-T3 Clad	0.032	F3-8	Replace
312	4521202195	• • • Bracket, Water Separator	1	2024-T42 Clad	0.032	F3-8	Replace
315	4521202194	• • • Bracket, Water Separator	1	2024-T42 Clad	0.032	F3-8	Replace
318	4521202206	• • • Bracket, Water Separator	1	2024-T3 Clad	0.032	F3-8	Replace
-	4521202190	• • • Bracket, Water Separator Inlet	1	2024-T3 Clad	0.032	F3-8	Replace
324	4521202187	• • • Bracket 1, Water Separator	1	2024-T42 Clad	0.032	F3-8	Replace
327	4521202184	• • • Bracket, Water Separator Outlet	1	2024-T3 Clad	0.032	F3-8	Replace
-	4520008404	• • • Support Bracket, Skin /Pylon Harness	1	2024-T3 Clad	0.032	F3-8	Replace
-	4520008403	• • • Bracket, Support Harness	1	2024-T3 Clad	0.032	F3-8	Replace
336	4520008273	• • • Mounting Bracket, RH FS 591	1	2024-T3 Clad	0.040	F3-8	Replace
339	4520008272	• • • Mounting Bracket, RH FS 580	1	2024-T3 Clad	0.040	F3-8	Replace
342	4520008266	• • • Mounting Bracket, RH FS 512	1	2024-T3 Clad	0.050	F3-8	Replace
345	4520008258	• • • Mounting Bracket FS 555	1	2024-T3 Clad	0.040	F3-8	Replace
348	4520008257	• • • Mounting Bracket, LH FS 550	1	2024-T3 Clad	0.040	F3-8	Replace
351	4520008256	• • • Mounting Bracket, LH FS 555	1	2024-T3 Clad	0.040	F3-8	Replace
354	4520008253	• • • Mounting Bracket, LH FS 503	1	2024-T3 Clad	0.050	F3-8	Replace
-	4520008249	• • • Bracket, Support Harness	1	2024-T3 Clad	0.032	F3-8	Replace
-	4520008248	• • • Bracket, Support Harness	1	2024-T3 Clad	0.032	F3-8	Replace
363	4520008245	• • • Bracket, Support Harness	1	2024-T3 Clad	0.032	F3-8	Replace
		- Not Illustrated					

Aft Fuselage Assembly Repair Index
Table 1 (Sheet 4 of 27)

ITEM NO.	DWG. NO.	DESCRIPTION	EFF CODE	MATERIAL	GAGE	FINISH CODE	REPAIR FIG. NO.
366	4520008244	• • • Angle, LH Support Harness FS 580	1	2024-T3 Clad	0.032	F3-8	Replace
369	4520008243	• • • Angle, LH Support Harness FS 567	1	2024-T3 Clad	0.032	F3-8	Replace
372	4520008242	• • • Bracket, Support Harness	1	2024-T3 Clad	0.032	F3-8	Replace
375	4520008241	• • • Bracket, Support Harness	1	2024-T3 Clad	0.032	F3-8	Replace
378	4520008240	• • • Bracket, Support Harness	1	2024-T3 Clad	0.032	F3-8	Replace
381	4520008239	• • • Channel, LH Support FS 567.00 to 580.00 (2 ea.)	1	2024-T3 Clad	0.032	F3-8	Replace
384	4520008238	• • • Bracket, Support Harness	1	2024-T3 Clad	0.032	F3-8	Replace
387	4520008237	• • • Bracket, Support Harness	1	2024-T3 Clad	0.032	F3-8	Replace
390	4520008236	• • • Bracket, Support Harness	1	2024-T3 Clad	0.032	F3-8	Replace
393	4536102246	• • • Angle Bracket, LH (2 ea.)	1	2024-T42 Clad	0.063	F3-8	Replace
-	4536102247	• • • Support Plate 1, LH FS 525	1	2024-T3 Clad	0.125	F3-8	Replace
-	4536102248	• • • Cleat, LH Bleed Air	1	2024-T3 Clad	0.063	F3-8	Replace
402	4536102249	• • • Cleat, LH Bleed Air	4	2024-T3 Clad	0.063	F3-8	Replace
405	4536102250	• • • Support Bracket, LH & RH FS 525	1	2024-T3 Clad	0.032	F3-8	Replace
408	4536102251	• • • Bracket, LH & RH FS 525	1	2024-T3 Clad	0.032	F3-8	Replace
-	4536102252	• • • Cleat, LP Bleed Air	1	▷	0.375	F1-10	Replace
-	4536102254	• • • Laminated Shim, LP Bleed Air	1	▷	0.054		Replace
417	4553506011	• • • Doubler, Access Panel	1	2024-T3 Clad	0.040	F3-8	Replace
420	4553506012	• • • Doubler, Access Panel	1	2024-T3 Clad	0.040	F3-8	Replace
423	4553506013	• • • Doubler, Access Panel	1	2024-T3 Clad	0.040	F3-8	Replace
426	4553506014	• • • Doubler, Access Panel	1	2024-T3 Clad	0.040	F3-8	Replace
429	4553506015	• • • Doubler, Access Panel	1	2024-T3 Clad	0.040	F3-8	Replace
432	4520008474	• • • Support Bracket, RH FS 580.00	3	2024-T3 Clad	0.032	F3-8	Replace
435	4520008475	• • • Support Bracket, LH FS 580.00	3	2024-T3 Clad	0.032	F3-8	Replace
-	4553500200	• • Aft Engine Beam Assy.	1	-	-	-	-
438	4553500205	• • • Channel, Fwd	1	7475-T7351	2.000	F3-8	Replace
441	4553500207	• • • Channel, Aft	1	7475-T7351	2.000	F3-8	Replace
		- Not Illustrated					

Aft Fuselage Assembly Repair Index
Table 1 (Sheet 5 of 27)

ITEM NO.	DWG. NO.	DESCRIPTION	EFF CODE	MATERIAL	GAGE	FINISH CODE	REPAIR FIG. NO.
444	4553500201	• • • End Fitting, LH & RH	1	9			Replace
447	4553500202	• • • Closing Plate, Top	1	7475-T761 Clad	0.130	F3-8	Replace
450	4553500203	• • • Closing Plate, Bottom	1	7475-T761 Clad	0.130	F3-8	Replace
-	4553500219	• • • Shim	1	10	0.032	-	Replace
-	4553500221	• • • Packer	1	4	0.025	F1-0	Replace
-	4553500229	• • • Packer	1	4	0.050	F1-0	Replace
-	4553500220	• • • Shim	1	9	0.032	-	Replace
-	4553500227	• • • Packer	1	4	0.025	F1-0	Replace
474	4554500076	• • • Tee, LH & RH Upper	1	7075-T76 Extr.	10	F3-8	Replace
477	4554500077	• • • Tee, LH & RH Lower	1	7075-T76 Extr.	11	F3-8	Replace
480	4554500020	• • • Bracket	1	2024-T351	1.750	F3-8	Replace
-	4553500100	• • Beam Assy., Fwd Engine	1	-	-	-	-
486	4553500102	• • • Channel, Fwd	1	7475-T7351	1.255	F3-8	Replace
489	4553500103	• • • Channel, Aft	1	7475-T7351	1.255	F3-8	Replace
492	4553500101	• • • Fitting, LH & RH End	1	9			Replace
495	4553500104	• • • Closing Plate, Top	1	7475-T761 Clad	0.130	F3-8	Replace
498	4553500105	• • • Closing Plate, Bottom	1	7475-T761 Clad	0.130	F3-8	Replace
504	4553500110	• • • Joint Plate	1	7075-T76 Clad	0.125	F3-8	Replace
-	4553500112	• • • Shim, End Fitting	1	8	0.062		Replace
510	4554500010	• • • Angle, Inboard LH	1	7075-T76 Clad	0.063	F3-8	Replace
513	4554500011	• • • Angle, Inboard RH	1	7475-T7351	1.870	F3-8	Replace
-	4554500013	• • • Bracket, LH & RH	1	7075-T76 Clad	0.071	F3-8	Replace
519	4554500041	• • • Bracket, LH & RH	1	7475-T7351		F3-8	Replace
522	4554500007	• • • Diaphragm, Vapor Barrier (2 ea.)	1	2024-T3 Clad	0.040	F3-8	Replace
525	4554500042	• • • Channel Support, LH & RH	1	7075-T76 Clad	0.050	F3-8	Replace
528	4554500073	• • • Tee, LH & RH Upper	1	7075-T76 Extr.	12	F3-8	Replace
531	4554500075	• • • Tee, LH & RH Lower	1	7075-T76 Extr.	13	F3-8	Replace
-	4554500150	• • • Seal, LH & RH	1	14		F0-10	Replace
537	4554500093	• • • Seal Retainer (2 ea.)	1	2024-T3 Clad	0.032	F3-8	Replace
-	4554500118	• • • Seal, LH & RH Inboard	1	14		F0-10	Replace
543	4554500119	• • • Seal Retainer, Inboard (2 ea.)	1	2024-T3 Clad	0.032	F3-8	Replace
-	4553500116	• • Fitting, Attachment, LH & RH	1	7475-T7351Plate	3.250	F3-8	Replace
		- Not Illustrated					

Aft Fuselage Assembly Repair Index
Table 1 (Sheet 6 of 27)

ITEM NO.	DWG. NO.	DESCRIPTION	EFF CODE	MATERIAL	GAGE	FINISH CODE	REPAIR FIG. NO.
-	4553500114	• • Intercostal, LH & RH Drag Strut	1	7475-T7351 Plate	-	F3-8	Replace
-	4553500113	• • Tee, LH & RH Drag Strut	1	7075-T6 Extr.	▷	-	Replace
-	4552405132	• • Bracket, Tailcone Door	1	2024-T3 Clad	0.040	F3-8	Replace
-	4552405034	• • Packer, Tailcone Door (2 ea.)	1	2024-T3 Clad	0.080	F3-8	Replace
-	4552405018	• • Plate FS 602.46	1	2024-T3 Clad	0.040	F3-8	Replace
-	4552405016	• • Bracket, Upper FS 602.46	1	2024-T3 Clad	0.040	F3-8	Replace
-	4552405014	• • Bracket, Upper	1	2024-T3 Clad	0.040	F3-8	Replace
-	4552405013	• • Bracket, Frame 48	1	2024-T42 Clad	0.040	F3-8	Replace
-	4552405009	• • Bracket, Upper Frame 47	1	2024-T42 Clad	0.040	F3-8	Replace
-	4552405008	• • Bracket, Upper Frame 46	1	2024-T3 Clad	0.040	F3-8	Replace
-	4552405007	• • Intercostal	1	7075-T76 Clad	0.050	F3-8	Replace
-	4552405174	• • Angle, Reinforcement	1	7475-T7351 Bar	1.500	F3-8	Replace
-	4552405175	• • Cleat, Frame 47	1	2024-T42 Clad	0.040	F3-8	Replace
-	4552405176	• • Cleat, Frame 47	1	2024-T43 Clad	0.040	F3-8	Replace
-	4552405177	• • Angle, Reinforcement	1	7475-T7351 Bar	1.500	F3-8	Replace
-	4552405178	• • Cleat, Frame 48	1	2024-T3 Clad	0.040	F3-8	Replace
-	4552405167	• • Packer, Frame 47	1	2024-T3 Clad	0.125	F3-8	Replace
-	4552300075	• • Bracket, Upper Frame 43	1	7475-T7351 Bar	0.632	F3-8	Replace
-	4552300048	• • Packer, Baggage Bay Door	1	2024-T3 Clad	0.125	F3-8	Replace
-	4552300041	• • Packer, Baggage Bay Door	1	2024-T3 Clad	0.090	F3-8	Replace
-	4552300040	• • Bracket, Upper Frame 44 & 45	1	2024-T3 Clad	0.090	F3-8	Replace
-	4552300037	• • Bracket, Baggage Bay Door Stop	1	7075-T7351	0.150	F3-8	Replace
-	4552300033	• • Brace, Door Stop	1	2024-T3 Clad	0.080	F3-8	Replace
-	4552300031	• • Packer, Baggage Bay Door Stop	1	2024-T3 Clad	0.125	F3-8	Replace
-	4552300019	• • Bracket, Baggage Bay Door	1	7075-T7351	0.150	F3-8	Replace
-	4552300010	• • Intercostal	1	7075-T76 Clad	0.050	F3-8	Replace
-	4552300263	• • Angle, Reinforcement	1	7475-T7351	1.500	F3-8	Replace
-	4552300264	• • Cleat, Frame 45	1	7075-T76 Clad	0.050	F3-8	Replace
-	4552300265	• • Cleat, Frame 46	1	7075-T76 Clad	0.050	F3-8	Replace
648	4525500145	• • Drainpipe Assy., LH & RH	1	-	-	F3-8	Replace
		- Not Illustrated					

Aft Fuselage Assembly Repair Index
Table 1 (Sheet 7 of 27)

ITEM NO.	DWG. NO.	DESCRIPTION	EFF CODE	MATERIAL	GAGE	FINISH CODE	REPAIR FIG. NO.
-	4525500143	• • • Pipe Stub	1	6061		F1-10	Replace
-	4525500144	• • • Plate	1	6061-T4	0.032	F1-10	Replace
657	4525500141	• • Landing Angle, RH Aft	1	2024-T3 Clad	0.040	F3-8	Replace
660	4525500140	• • Landing Angle, RH Fwd.	1	2024-T3 Clad	0.040	F3-8	Replace
-	4525500134	• • Splice Angle, Lower Roof Channel	1	2024-T3 Clad	0.040	F3-8	Replace
-	4525500133	• • Splice Angle, Roof Channel	1	2024-T3 Clad	0.040	F3-8	Replace
-	4525500114	• • Cleat, Channel Support	1	2024-T3 Clad	0.040	F3-8	Replace
675	4525500113	• • Channel Support	1	2024-T3 Clad	0.040	F3-8	Replace
678	4525500111	• • Channel, Aft	1	2024-T3 Clad	0.040	F3-8	Replace
681	4525500110	• • Channel, Aft	1	2024-T3 Clad	0.040	F3-8	Replace
684	4525500069	• • Shear Tie, LH & RH Outboard	1	2024-T3 Clad	0.063	F3-8	Replace
687	4525500068	• • Cleat, Aft Center Bulkhead	1	7075-T76 Clad	0.063	F3-8	Replace
690	4525500064	• • Tee Cleat (2 ea.)	1	7075-T7351	1.750	F3-8	Replace
693	4525500063	• • Shear Cleat, LH & RH Frame 43	1	7075-T76 Clad	0.080	F3-8	Replace
696	4525500061	• • Shear Cleat, LH & RH Frame 43	1	7075-T76 Clad	0.080	F3-8	Replace
699	4525500060	• • Crossbeam, Center Baggage Bay Roof	1	7075-T76 Clad	0.080	F3-8	Replace
702	4525500058	• • Cleat, Fwd Bulkhead	4	7075-T76 Clad	0.080	F3-8	Replace
705	4525500057	• • Shear Cleat, LH & RH FS 512.254	1	7075-T76 Clad	0.080	F3-8	Replace
708	4525500056	• • Plate, LH	4	2024-T3 Clad	0.040	F3-8	Replace
711	4525500055	• • Plate, RH	4	2024-T3 Clad	0.040	F3-8	Replace
714	4525500052	• • Tee Cleat, Center Pillar	1	7075-T7351	2.500	F3-8	Replace
717	4525500051	• • Center Member, Aft Baggage Bay Roof	1	7075-T7351	4.100	F3-8	Replace
720	4525500050	• • Center Member, Aft Baggage Bay Roof	1	7075-T7351	4.100	F3-8	Replace
723	4525500032	• • Angle, RH	1	2024-T42 Clad	0.040	F3-8	Replace
726	4525500031	• • Angle, LH	1	2024-T3 Clad	0.040	F3-8	Replace
729	4525500007	• • Crossbeam, Aft Bulkhead	1	7075-T76 Clad	0.063	F3-8	Replace
		- Not Illustrated					

Aft Fuselage Assembly Repair Index
Table 1 (Sheet 8 of 27)

ITEM NO.	DWG. NO.	DESCRIPTION	EFF CODE	MATERIAL	GAGE	FINISH CODE	REPAIR FIG. NO.
732	4525500002	• • Crossbeam, Fwd	4	7075-T76 Clad	0.080	F3-8	Replace
-	4536102198	• • Bracket, Servo Air	1	2024-T3 Clad	0.032	F3-8	Replace
-	4536102179	• • Bracket	1	2024-T3 Clad	0.032	F3-8	Replace
-	4536102178	• • Bracket	1	4	0.032	F1-10	Replace
-	4536102177	• • Bracket	1	2024-T3 Clad	0.032	F3-8	Replace
-	4536102176	• • Bracket	1	4	0.020	F1-10	Replace
-	4536102174	• • Bracket	1	4	0.020	F1-10	Replace
-	4536102173	• • Bracket	1	2024-T42 Clad	0.040	F3-8	Replace
-	4533308006	• • Mounting Angle FS 614.00	1	2024-T42 Clad	0.040	F3-8	Replace
-	4533308005	• • Mounting Bracket FS 614.00	1	2024-T42 Clad	0.040	F3-8	Replace
762	4530102066	• • Bracket, Anti-ice	1	4	0.020	F1-10	Replace
-	4527302165	• • Plate, Upper Outboard Elevator Pulley Panel	1	7075-T76 Clad	0.040	F3-8	Replace
-	4527302163	• • Doubler, Outboard Elevator	1	2024-T3 Clad	0.040	F3-8	Replace
-	4526302014	• • Attach Loop Strip Frame 40	1	15	-	-	Replace
-	4526302017	• • Velcro Strip	1	16	-	-	Replace
-	4526302018	• • Velcro Strip	1	16	-	-	Replace
-	4526302019	• • Velcro Strip	1	16	-	-	Replace
-	4526302160	• • Cleat, Upper Elevator Pulley Panel	1	2024-T3 Clad	0.040	F3-8	Replace
-	4526302159	• • Cleat, Upper Pulley Panel	1	2024-T3 Clad	0.040	F3-8	Replace
-	4526302158	• • Diaphragm, Rear Pulley Panel	1	2024-T42 Clad	0.040	F3-8	Replace
-	4526302156	• • Plate, Upper Inboard Elevator Pulley Panel	1	2024-T3 Clad	0.040	F3-8	Replace
-	4526302152	• • Cleat, Upper Rear Rudder Pulley Panel	1	2024-T3 Clad	0.040	F3-8	Replace
-	4526302151	• • Plate, Upper Inboard Rudder Pulley Panel	1	2024-T3 Clad	0.040	F3-8	Replace
-	4526302150	• • Plate, Upper Outboard Rudder Pulley Panel	1	7075-T76 Clad	0.040	F3-8	Replace
804	4524608106	• • Support Angle, RH Aft Distribution Panel	1	2024-T3 Clad	0.050	F3-8	Replace
		- Not Illustrated					

Aft Fuselage Assembly Repair Index
Table 1 (Sheet 9 of 27)

ITEM NO.	DWG. NO.	DESCRIPTION	EFF CODE	MATERIAL	GAGE	FINISH CODE	REPAIR FIG. NO.
807	4524608104	• • Channel, Support, RH Outer Distribution Panel	1	2024-T42 Clad	0.050	F3-8	Replace
810	4524608103	• • Support Bracket, RH Inner Distribution Panel	1	2024-T3 Clad	0.050	F3-8	Replace
-	4521502028	• • Mounting Bracket, Fwd Inboard ACM Structure	1	7075-T7351 Bar	3.250	F3-8	Replace
-	4521502027	• • Mounting Bracket, Fwd Outboard ACM Structure	1	7075-T7351 Bar	3.250	F3-8	Replace
-	4521502015	• • Cleat, Fwd Inboard ACM Structure	1	2024-T42 Clad	0.040	F3-8	Replace
-	4521502007	• • Closing Plate, Fwd Inboard ACM Structure	1	2024-T42 Clad	0.040	F3-8	Replace
-	4521502006	• • Cleat, Fwd Outboard ACM Structure	1	2024-T3 Clad	0.040	F3-8	Replace
-	4521502005	• • Mounting Plate, Fwd ACM Structure	1	2024-T42 Clad	0.040	F3-8	Replace
-	4521502002	• • Bracket, Aft Outboard ACM Structure	1	7475-T7351	1.630	F3-8	Replace
-	4521502001	• • Bracket, Aft Inboard ACM Structure	1	7475-T7351	1.630	F3-8	Replace
837	4521202192	• • Bracket, ECS System	1	2024-T42 Clad	0.080	F3-8	Replace
840	4521202183	• • Bracket, Cockpit Distribution	1	7075-T76 Clad	0.080	F3-8	Replace
-	4521202101	• • Shim	1	▷	0.054	F3-8	Replace
-	4521202100	• • Shim	1	▷	0.054	F3-8	Replace
-	4521202098	• • Stiffener, Fwd ACM Mounting Structure	1	7075-T76 Clad	0.040	F3-8	Replace
-	4520008235	• • Conduit (4 inch) Bracket FS 513.00 (2 ea.)	1	2024-T3 Clad	0.050	F3-8	Replace
-	4520008234	• • Conduit (3 inch) Bracket FS 513.00 (2 ea.)	1	2024-T3 Clad	0.050	F3-8	Replace
-	4520008233	• • Conduit (2 inch) Bracket FS 513.00 (2 ea.)	1	2024-T3 Clad	0.050	F3-8	Replace
-	4520008236	• • Bracket, Frame 40 (2 ea.)	1	2024-T3 Clad	0.032	F3-8	Replace
-	T23500EB	• • • Tube	1	2024-T42 Clad		F3-8	Replace
		- Not Illustrated					

Aft Fuselage Assembly Repair Index
Table 1 (Sheet 10 of 27)

ITEM NO.	DWG. NO.	DESCRIPTION	EFF CODE	MATERIAL	GAGE	FINISH CODE	REPAIR FIG. NO.
870	E5897	• • • Clevis	1	-	-	-	-
-	4553005001	Aft Fuselage Assy.	1	-	-	-	-
879	4573202007	• Cleat, Engine Controls	1	2024-T3 Clad	0.040	F3-8	Replace
882	4573202006	• Cleat, Engine Controls (4 ea.)	1	2024-T3 Clad	0.040	F3-8	Replace
885	4573202002	• Angle, Engine Controls	1	2024-T3 Clad	0.040	F3-8	Replace
888	4573202001	• Platform, Engine Controls	1	2024-T42 Clad	0.040	F3-8	Replace
891	4554500095	• Angle, LH & RH Lower	1	2024-T42 Clad	0.040	F3-8	Replace
894	4554500094	• Angle, LH & RH Upper	1	2024-T42 Clad	0.040	F3-8	Replace
897	4554500024	• Pylon Trailing Edge Sub. Assy.	1	-	-	-	-
-	4554500134	• • Rib, LH & RH Outboard	1	[4]	0.020	F1-10	Replace
-	4554500128	• • Packer (2 ea.)	1	L166T4	0.036	F3-8	Replace
-	4554500087	• • Rib, LH & RH Aft Inboard	1	2024-T42 Clad	0.040	F3-8	Replace
-	4554500084	• • Rib, LH & RH Fwd Inboard	1	2024-T42 Clad	0.040	F3-8	Replace
-	4554500079	• • Tee, LH & RH Lower	1	7075-T76	[10]	F3-8	Replace
-	4554500078	• • Tee, LH & RH Upper	1	7075-T76	[10]	F3-8	Replace
-	4554500066	• • Panel, LH & RH Lower	1	2024-T3 Clad	0.063	F3-8	Replace
-	4554500065	• • Panel, LH & RH Upper	1	2024-T3 Clad	0.063	F3-8	Replace
-	4554500030	• • Rib Cleat FS 574.40 (2 ea.)	1	2024-T42 Clad	0.040	F3-8	Replace
-	4554500029	• • Intercostal, LH & RH	1	2024-T42 Clad	0.040	F3-8	Replace
-	4554500023	• • Landing, Lower	1	2024-T3 Clad	0.050	F3-8	Replace
-	4554500022	• • Landing, Upper	1	2024-T3 Clad	0.050	F3-8	Replace
-	4554500018	• • Cleat, LH & RH Fwd	1	2024-T42 Clad	0.040	F3-8	Replace
-	4554500008	• • Diaphragm, LH & RH	1	2024-T3 Clad	0.040	F3-8	Replace
-	4554500155	• • Doubler	1	[4]	0.032	F1-10	Replace
-	4554500080	• • Angle, Upper Drag (2 ea.)	1	2024-T42 Clad	0.063	F3-8	Replace
-	4554500081	• • Angle, LH Lower	1	2024-T42 Clad	0.063	F3-8	Replace
-	4554500137	• • Angle, RH Lower	1	2024-T42 Clad	0.063	F3-8	Replace
-	4554500152	• • Rib, LH & RH Fwd	1	[4]	0.020	F1-10	Replace
-	4554500091	• • Attachment Angle, LH & RH Aft	1	2024-T42 Clad	0.063	F3-8	Replace
-	4554500092	• • Attachment Angle, LH & RH Fwd	1	2024-T42 Clad	0.063	F3-8	Replace
		- Not Illustrated					

Aft Fuselage Assembly Repair Index
Table 1 (Sheet 11 of 27)

ITEM NO.	DWG. NO.	DESCRIPTION	EFF CODE	MATERIAL	GAGE	FINISH CODE	REPAIR FIG. NO.
-	4554500118	• Panel Assy., LH & RH Upper	1	-	-	-	-
-	4554500036	• • Panel Sub. Assy. LH & RH	1	-	-	-	-
-	4554500037	• • • Skin, Panel Inner	1	2024-T42 Clad	0.020	F3-7	Replace
-	4554500038	• • • Core	1	17	0.433	F0-10	Replace
-	4554500039	• • • Skin, Outer Panel	1	2024-T3 Clad	0.020	21	Replace
-	4554500040	• • • Doubler	1	2024-T3 Clad	0.040	F3-7	Replace
-	4554500142	• • Seal	1	14			
-	4554500111	• • Retainer	1	2024-T3 Clad	0.032	F3-8	Replace
-	4554500120	• Panel Assy., LH & RH Aft	1	-	-	-	-
-	4554500059	• • Panel Sub. Assy., LH & RH	1	-	-	-	-
-	4554500060	• • • Skin, Inner Panel	1	2024-T42 Clad	0.050	F3-8	Replace
-	4554500061	• • • Core	1	17	0.437	F0-10	Replace
-	4554500062	• • • Skin, Outer Panel	1	2024-T3 Clad	0.020	F3-8	Replace
-	4554500144	• • Seal	1	18	-	-	-
-	4554500121	• Panel Assy., LH & RH Lower	1	-	-	-	-
-	4554500048	• • Panel Sub. Assy., LH & RH	1	-	-	-	-
-	4554500050	• • • Core	1	19	16MM	F0-10	Replace
-	4554500051	• • • Skin, Outer Panel	1	2024-T3 Clad	0.020	F0-10	Replace
-	4554500143	• • Seal	1	18			
-	4554500114	• • Retainer	1	2024-T3 Clad	0.032	F3-8	Replace
-	4554500123	• Panel Assy., LH & RH Aft Lower	1	-	-	-	-
-	4554500054	• • Panel Sub. Assy., LH & RH	1	-	-	-	-
-	4554500056	• • • Core	1	19	0.375	F0-10	Replace
-	4554500057	• • • Skin, Outer Panel	1	2024-T3 Clad	0.020	F0-10	Replace
-	4554500145	• • Seal	1	18			
-	4554500116	• • Retainer	1	2024-T3 Clad	0.032	F3-8	Replace
1044	4553504776	• Frame FS 596.78	1	7075-T76 Clad	0.040	F3-8	Replace
-	4553504603	• Channel, LH FS 580.800	1	2024-T42 Clad	0.040	F3-8	Replace
-		Tailcone Door Surround Structure	1	-	-	-	-
1050	4552405140	• Bracket FS 602.46	2	7475-T7351	1.600	F3-8	Replace
1053	4552405086	• Bracket, Door Stop	2	7475-T7351	1.500	F3-8	Replace
		- Not Illustrated					

Aft Fuselage Assembly Repair Index
Table 1 (Sheet 12 of 27)

ITEM NO.	DWG. NO.	DESCRIPTION	EFF CODE	MATERIAL	GAGE	FINISH CODE	REPAIR FIG. NO.
-	4552405084	• Latch Seal, Fwd. Assy.	2	-	-	-	-
-	4552405085	• • Seal	2	23	-	-	Replace
-	4552300103	• • Seal	2	23	-	-	Replace
-	4552405082	• • Plate	2	4	0.040	F1-0	Replace
-	4552405081	• Packer, Seal FS 580.80	1	2024-T3 Clad	0.032	F3-8	Replace
-	4552405079	• Seal, Lwr Fwd Corner	2	22	-	-	-
-	4552405078	• Seal, LH & RH Upper Corner	2	22	-	-	
-	4552405077	• Seal, Aft Lower Corner	2	22	-	-	-
-	4552405076	• Seal, Lower	2	22	-	-	-
-	4552405075	• Seal, Upper	2	22	-	-	-
-	4552405074	• Seal FS 580.80	2	22	-	-	-
-	4552405073	• Seal FS 602.46	2	22	-	-	
-	4552405071	• Bracket, Lwr FS 602.46	1	2024-T3 Clad	0.040	F3-8	Replace
-	4552405070	• Sill, Intercostal	1	2024-T42 Clad	0.050	F3-8	Replace
-	4552405067	• Angle, Lwr FS 602.46	1	2024-T42 Clad	0.080	F3-8	Replace
-	4552405066	• Angle, Lwr Longeron FS 580.80	1	2024-T42 Clad	0.080	F3-8	Replace
-	4552405052	• Latch Seal, Aft Sub. Assy.	2	-	-	-	-
-	4552405085	• • Seal	2	23	-	-	Replace
-	4552300103	• • Seal	2	23	-	-	Replace
-	4552405082	• • Plate	2	4	0.040	F1-0	Replace
1116	4552405048	• Bracket, Door Stop	2	7075-T7351 Bar	1.500	F3-8	Replace
-	4552405046	• Gusset, Aft Upper Corner	1	2024-T3 Clad	0.032	F3-8	Replace
-	4552405045	• Gusset, Fwd. Upper Corner	1	2024-T3 Clad	0.032	F3-8	Replace
-	4552405044	• Gusset, Aft Lwr Corner	1	2024-T3 Clad	0.032	F3-8	Replace
-	4552405043	• Gusset, Fwd. Lwr Corner	1	2024-T3 Clad	0.032	F3-8	Replace
-	4552405042	• Gusset, Aft Upper	1	2024-T42 Clad	0.032	F3-8	Replace
-	4552405041	• Gusset, Fwd. Upper	1	2024-T42 Clad	0.032	F3-8	Replace
-	4552405040	• Gusset, Aft Lwr	1	2024-T42 Clad	0.032	F3-8	Replace
-	4552405039	• Gusset, Fwd. Lwr	1	2024-T42 Clad	0.032	F3-8	Replace
-	4552405036	• Packer FS 602.46	1	2024-T3 Clad	0.160	F3-8	Replace
-	4552405034	• Packer	1	-	-	-	-
-	4552405033	• Packer FS 602.46	2	2024-T3 Clad	0.032	F3-8	Replace
-	4552405032	• Packer, Lwr	1	2024-T3 Clad	0.050	F3-8	Replace
		- Not Illustrated					

Aft Fuselage Assembly Repair Index
Table 1 (Sheet 13 of 27)

ITEM NO.	DWG. NO.	DESCRIPTION	EFF CODE	MATERIAL	GAGE	FINISH CODE	REPAIR FIG. NO.
-	4552405031	• Seal Retainer, Fwd. Lwr. Corner	2	2024-T42 Clad	0.040	F3-8	Replace
-	4552405030	• Seal Retainer, Fwd. Upper Corner	2	2024-T42 Clad	0.040	F3-8	Replace
-	4552405029	• Seal Retainer FS 580.80	2	2024-T42 Clad	0.040	F3-8	Replace
-	4552405028	• Seal Retainer, Upper	2	2024-T3 Clad	0.040	F3-8	Replace
-	4552405027	• Seal Retainer, Lwr	2	2024-T3 Clad	0.040	F3-8	Replace
-	4552405026	• Seal Retainer, Aft Lwr Corner	2	2024-T42 Clad	0.040	F3-8	Replace
-	4552405025	• Seal Retainer, Aft Upper Corner	2	2024-T42 Clad	0.040	F3-8	Replace
-	4552405024	• Seal Retainer, FS 602.46	2	2024-T42 Clad	0.040	F3-8	Replace
-	4552405023	• Plate, Aft Upper Corner	1	2024-T3 Clad	0.040	F3-8	Replace
-	4552405022	• Plate, Fwd. Upper Corner	1	2024-T3 Clad	0.040	F3-8	Replace
-	4552405021	• Plate, Aft Lwr Corner	1	2024-T3 Clad	0.050	F3-8	Replace
-	4552405020	• Plate, Fwd. Lwr Corner	1	2024-T3 Clad	0.050	F3-8	Replace
-	4552405019	• Bracket, Sill FS 602.46	1	2024-T3 Clad	0.040	F3-8	Replace
-	4552405018	• Plate FS 602.46	1	2024-T3 Clad	0.040	F3-8	Replace
-	4552405017	• Bracket, Lower Inner FS 580.80	1	2024-T3 Clad	0.040	F3-8	Replace
-	4552405013	• Bracket, LH & RH FS 602.46	1	2024-T42 Clad	0.040	F3-8	Replace
-	4552405012	• Bracket, Lower FS 591.93	1	2024-T42 Clad	0.040	F3-8	Replace
-	4552405011	• Bracket, Lower FS 580.80	1	2024-T3 Clad	0.040	F3-8	Replace
		Baggage Bay Door Structure	1	-	-	-	-
1209	4552300163	• Bracket, Anchor FS 580.80	2	7075-T7351	1.500	F3-8	Replace
-	4552300158	• Latch Block	2	Nylon 66 L-P-410	0.500	F3-8	Replace
-	4552300148	• Joining Sleeve	2	▷	-	F0-10	Replace
-	4552300101	• Seal, Lower Aft Corner	2	▷	-	F0-10	Replace
-	4552300100	• Seal, Lower Fwd Corner	2	▷	-	F0-10	Replace
-	4552300099	• Seal, Lower	2	▷	-	F0-10	Replace
-	4552300098	• Seal, Fwd Upper Corner	2	▷	-	F0-10	Replace
-	4552300097	• Seal FS 546.15	2	▷	-	F0-10	Replace
-	4552300096	• Seal, Upper	2	▷	-	F0-10	Replace
-	4552300095	• Seal, Aft Upper Corner	2	▷	-	F0-10	Replace
-	4552300094	• Seal FS 580.80	2	▷	-	F0-10	Replace
-	4552300091	• Bracket, Micro Switch	1	AISI431	0.040	F1-10	Replace
-	4552300090	• Corner Packer, Fwd Lower	1	2024-T3 Clad	0.040	F3-8	Replace
		- Not Illustrated					

Aft Fuselage Assembly Repair Index
Table 1 (Sheet 14 of 27)

ITEM NO.	DWG. NO.	DESCRIPTION	EFF CODE	MATERIAL	GAGE	FINISH CODE	REPAIR FIG. NO.
-	4552300089	• Reinforcement Angle	1	2024-T42 Clad	0.080	F3-8	Replace
-	4552300086	• Latch Seal	2	-	-	-	Replace
-	4552300104	• • Seal	2	23	-	F0-10	Replace
-	4552300103	• • Seal	2	23	-	F0-10	Replace
-	4552300106	• • Plate	2	4	0.040	F1-10	Replace
-	4552300085	• Latch Seal, Fwd	2	-	-	-	Replace
-	4552300102	• • Seal	2	23	-	F0-10	Replace
-	4552300103	• • Seal	2	23	-	F0-10	Replace
-	4552300105	• • Plate	2	4	0.040	F1-10	Replace
-	4552300073	• Corner Packer	1	2024-T3 Clad	0.020	F3-8	Replace
-	4552300072	• Sill, Intercostal	2	2024-T42 Clad	0.050	F3-8	Replace
-	4552300070	• Seal Retainer, FS 580.80	2	2024-T42 Clad	0.080	F3-8	Replace
-	4552300065	• Gusset, Aft Upper	1	2024-T42 Clad	0.080	F3-8	Replace
-	4552300064	• Gusset, Fwd Upper	1	2024-T42 Clad	0.080	F3-8	Replace
-	4552300063	• Corner Gusset, Aft Upper	1	2024-T3 Clad	0.020	F3-8	Replace
-	4552300062	• Seal Retainer	2	2024-T3 Clad	0.040	F3-8	Replace
-	4552300061	• Seal Retainer, Sill	2	2024-T3 Clad	0.040	F3-8	Replace
-	4552300060	• Corner Gusset, Fwd Upper	1	2024-T3 Clad	0.020	F3-8	Replace
-	4552300059	• Corner Plate, Aft Upper	1	2024-T3 Clad	0.032	F3-8	Replace
-	4552300057	• Pin, Door Catch	1	2024-T3511	0.190	F3-8	Replace
-	4552300056	• Housing, Door Catch	2	7075-T7351	0.750	F3-8	Replace
-	4552300055	• Seal Retainer, Fwd Lower	2	2024-T42 Clad	0.040	F3-8	Replace
-	4552300054	• Gusset, Aft Upper	1	2024-T3 Clad	0.020	F3-8	Replace
-	4552300052	• Packer	1	2024-T3 Clad	0.090	F3-8	Replace
-	4552300051	• Cap, Door Catch	1	7075-T7351	0.250	F3-8	Replace
-	4552300050	• Seal Retainer, Fwd Upper	2	2024-T42 Clad	0.040	F3-8	Replace
-	4552300049	• Packer	1	2024-T3 Clad	0.125	F3-8	Replace
-	4552300047	• Plate, Fwd Upper	1	2024-T3 Clad	0.032	F3-8	Replace
-	4552300046	• Gusset, Aft Lwr	1	2024-T42 Clad	0.040	F3-8	Replace
-	4552300045	• Bushing, Inner Door Catch	1	24	1.250	-	Replace
-	4552300044	• Gusset, Aft Upper Inner	1	2024-T42 Clad	0.040	F3-8	Replace
-	4552300043	• Seal Retainer FS546.15	2	2024-T42 Clad	0.040	F3-8	Replace
-	4552300042	• Plate, Aft Lower Corner	1	2024-T3 Clad	0.050	F3-8	Replace
		- Not Illustrated					

Aft Fuselage Assembly Repair Index
Table 1 (Sheet 15 of 27)

ITEM NO.	DWG. NO.	DESCRIPTION	EFF CODE	MATERIAL	GAGE	FINISH CODE	REPAIR FIG. NO.
-	4552300039	• Packer	2	2024-T3 Clad	0.063	F3-8	Replace
-	4552300038	• Corner Plate, Fwd Lwr	1	2024-T3 Clad	0.050	F3-8	Replace
-	4552300037	• Bracket, Door Stop	2	7075-T7351 Bar	1.500	F3-8	Replace
-	4552300036	• Packer, Lower Seal	2	2024-T3 Clad	0.050	F3-8	Replace
-	4552300034	• Seal Retainer	2	2024-T3 Clad	0.040	F3-8	Replace
-	4552300032	• Packer	1	2024-T3 Clad	0.125	F3-8	Replace
-	4552300030	• Intercostal FS 580.80	1	2024-T42 Clad	0.032	F3-8	Replace
-	4552300029	• Intercostal FS 546.15	2	2024-T42 Clad	0.040	F3-8	Replace
-	4552300028	• Gusset, Fwd Lwr	1	2024-T42 Clad	0.040	F3-8	Replace
-	4552300027	• Gusset, Fwd Upper	1	2024-T42 Clad	0.040	F3-8	Replace
-	4552300026	• Gusset, Aft Lwr	1	2024-T42 Clad	0.040	F3-8	Replace
-	4552300024	• Gusset, Fwd Lwr	1	2024-T42 Clad	0.040	F3-8	Replace
-	4552300021	• Seal Retainer, Aft Lwr	1	2024-T42 Clad	0.040	F3-8	Replace
-	4552300020	• Seal Retainer, Aft Upper	1	2024-T42 Clad	0.040	F3-8	Replace
-	4552300018	• Bracket	1	7475-T7351Bar	0.750	F3-8	Replace
-	4552300017	• Seal Retainer, Fwd	1	2024-T3 Clad	0.020	F3-8	Replace
-	4552300015	• Gusset, Fwd Lwr	1	2024-T3 Clad	0.020	F3-8	Replace
-	4552300014	• Gusset, Aft Upper	1	2024-T3 Clad	0.020	F3-8	Replace
-	4552300013	• Gusset, Fwd Upper	1	2024-T3 Clad	0.020	F3-8	Replace
-	4552300012	• Gusset, Aft Lwr	1	2024-T3 Clad	0.020	F3-8	Replace
-	4552300011	• Gusset, Fwd Lwr	1	2024-T3 Clad	0.020	F3-8	Replace
-	4552300009	• Angle FS 580.80	1	2024-T42 Clad	0.020	F3-8	Replace
-	4552300008	• Angle FS 546.156	1	2024-T42 Clad	0.020	F3-8	Replace
-	4525500142	• Splice Angle, Fwd Support	1	2024-T3 Clad	0.040	F3-8	Replace
-	4525500136	• Cleat, Lower Center Post	1	2024-T3 Clad	0.040	F3-8	Replace
-	4525500135	• Splice Angle, Aft	1	2024-T3 Clad	0.040	F3-8	Replace
-	4525500126	• Landing Angle, RH Fwd	1	2024-T3 Clad	0.040	F3-8	Replace
-	4525500125	• Landing Angle, LH Aft	1	2024-T42 Clad	0.040	F3-8	Replace
-	4525500124	• Landing Angle, LH Fwd	1	2024-T42 Clad	0.040	F3-8	Replace
-	4525500122	• Landing Angle, RH Aft	1	2024-T42 Clad	0.040	F3-8	Replace
-	4525500120	• Bracket, Tray Mounting	1	2024-T3 Clad	0.032	F3-8	Replace
-	4525500119	• Cleat, Aft Support Plate	1	2024-T3 Clad	0.040	F3-8	Replace
-	4525500118	• Bracket, Tray Mounting	1	2024-T3 Clad	0.032	F3-8	Replace
		- Not Illustrated					

Aft Fuselage Assembly Repair Index
Table 1 (Sheet 16 of 27))

ITEM NO.	DWG. NO.	DESCRIPTION	EFF CODE	MATERIAL	GAGE	FINISH CODE	REPAIR FIG. NO.
-	4525500117	• Cleat, Center Post	1	2024-T3 Clad	0.040	F3-8	Replace
-	4525500115	• Cleat, Fwd Support Plate	1	2024-T3 Clad	0.040	F3-8	Replace
-	4525500112	• Liner Assy., Cable Tray	1	2024-T3 Clad	0.020	F3-8	Replace
-	4525500109	• Support Angle, Aft Liner Assy.	1	2024-T3 Clad	0.040	F3-8	Replace
-	4525500108	• Support Angle, Liner Assy.	1	2024-T3 Clad	0.040	F3-8	Replace
-	4525500107	• Support Plate, Fwd	1	2024-T3 Clad	0.040	F3-8	Replace
-	4525500106	• Bulkhead Assy., Corner Post	1	2024-T3 Clad	0.040	F3-8	Replace
-	4525500105	• Liner Assy., Center Post	1	7075-T7351 Plate	2.50	F3-8	Replace
-	4525500103	• Cleat, Aft Bulkhead	1	2024-T3 Clad	0.032	F3-8	Replace
1482	4525500102	• Corner Post, Fwd	1	2024-T3 Clad	0.040	F3-8	Replace
1485	4525500101	• Closing Plate, Fwd	1	2024-T3 Clad	0.040	F3-8	Replace
-	4525500100	• Angle Cleat, Aft Roof	1	2024-T3 Clad	0.040	F3-8	Replace
-	4525500094	• Packer	1	2024-T3 Clad	0.032	F3-8	Replace
1494	4525500079	• Landing Angle	5	2024-T42 Clad	0.040	F3-8	Replace
-	4525500078	• Shear Plate	5	7075-T6 Clad	0.080	F3-8	Replace
1500	4525500076	• Doubler, Fwd Bulkhead	5	7075-T6 Clad	0.080	F3-8	Replace
1503	4525500075	• Vertical Stiffener	5	7075-T6 Clad	0.080	F3-8	Replace
1506	4525500074	• Angle	1	2024-T3 Clad	0.040	F3-8	Replace
-	4525500072	• Shear Plate, Center Pillar	1	7075-T6 Clad	0.050	F3-8	Replace
1512	4525500071	• Landing Angle	1	2024-T42 Clad	0.040	F3-8	Replace
-	4525500066	• Support Angle	1	2024-T3 Clad	0.040	F3-8	Replace
-	4525500043	• Longeron, LH	1	7075-T7351 Plate	3.50	F3-8	Replace
-	4525500039	• Cleat	1	2024-T3 Clad	0.040	F3-8	Replace
-	4525500037	• Vertical Crossbeam, Aft Bulkhead	1	7075-T6 Clad	0.063	F3-8	Replace
-	4525500033	• Aft Bulkhead Assy.	1	-	-	-	-
-	4525500034	• •Diaphragm	1	2024-T3 Clad	0.032	F3-8	Replace
-	4525500035	• • Stiffener	1	7075-T76 Clad	0.063	F3-8	Replace
-	4525500036	• • Stiffener	1	7075-T76 Clad	0.063	F3-8	Replace
-	4525500038	• • Cleat	1	2024-T3 Clad	0.032	F3-8	Replace
-	4525500087	• • Stiffener	1	2024-T42 Clad	0.032	F3-8	Replace
-	4525500088	• • Stiffener	1	2024-T42 Clad	0.032	F3-8	Replace
-	4525500089	• • Stiffener	1	2024-T42 Clad	0.032	F3-8	Replace
		- Not Illustrated					

Aft Fuselage Assembly Repair Index
Table 1 (Sheet 17 of 27)

ITEM NO.	DWG. NO.	DESCRIPTION	EFF CODE	MATERIAL	GAGE	FINISH CODE	REPAIR FIG. NO.
-	4525500090	• • Stiffener	1	2024-T3 Clad	0.032	F3-8	Replace
-	4525500091	• • Stiffener	1	2024-T3 Clad	0.032	F3-8	Replace
-	4525500092	• • Stiffener	1	2024-T3 Clad	0.032	F3-8	Replace
-	4525500093	• • Stiffener	1	2024-T42 Clad	0.032	F3-8	Replace
1563	4525500001	• Channel, Center Pillar	1	2024-T8511	25	F3-8	Replace
1566	4529202014	• Bracket	1	2024-T42 Clad	0.032	F3-8	Replace
-	4529202073	• Bracket FS 508	1	2024-T42 Clad	0.032	F3-8	Replace
-		Single-Point-Pressure Refueling	1	-	-	-	-
-	4528208014	• Rubbing Strip	1	2024-T3 Clad	0.040	F3-8	Replace
-	4528208013	• Doubler, Aft Landing	1	2024-T3 Clad	0.040	F3-8	Replace
-	4528208012	• Doubler, Fwd Landing	1	2024-T3 Clad	0.040	F3-8	Replace
-	4528208010	• Access Panel	1	26	0.035	-	Replace
-	4528208009	• Packer	1	2024-T3 Clad	0.020	F3-8	Replace
-	4528208007	• Hinge, Panel	1	27	-	-	Replace
-	4528208006	• Panel, Hinged	1	2024-T3 Clad	0.040	F3-8	Replace
-	4528208005	• Cleat	1	2024-T3 Clad	0.040	F3-8	Replace
-	4528208004	• Channel, Aft	1	2024-T42 Clad	0.040	F3-8	Replace
-	4528208003	• Channel, Fwd	1	2024-T42 Clad	0.040	F3-8	Replace
-	4528208002	• Cleat	1	2024-T3 Clad	0.040	F3-8	Replace
-	4528208001	• Bracket	1	2024-T42 Clad	0.040	F3-8	Replace
-	4527302162	• Mounting Plate, RH Rudder Pulley	1	2024-T3 Clad	0.050	F3-8	Replace
-	4527302161	• Mounting Plate, LH Elevator Pulley	1	2024-T3 Clad	0.050	F3-8	Replace
-	4527302153	• Mounting Cleat, LH & RH Elevator Pulley	1	2024-T42 Clad	0.063	F3-8	Replace
-	4527302150	• Support Beam, Elevator	1	7075-T76 Clad	0.040	F3-8	Replace
-	4527202153	• Mounting Cleat, Fwd Lower Panel	1	2024-T3 Clad	0.040	F3-8	Replace
-	4527202146	• Mounting Cleat, Rudder Aft Pulley	1	2024-T42 Clad	0.063	F3-8	Replace
-	4527202140	• Support Beam, Rudder	1	2024-T42 Clad	0.040	F3-8	Replace
1629	4525708321	• Mounting Bracket, Engine Vibration Signal	1	2024-T3 Clad	0.040	F3-8	Replace
		- Not Illustrated					

Aft Fuselage Assembly Repair Index
Table 1 (Sheet 18 of 27)

ITEM NO.	DWG. NO.	DESCRIPTION	EFF CODE	MATERIAL	GAGE	FINISH CODE	REPAIR FIG. NO.
1632	4525708320	• Restraint Angle, Battery	1	2024-T3 Clad	0.040	F3-8	Replace
-	4525708318	• Support Cleat, Upper Shelf	1	2024-T3 Clad	0.040	F3-8	Replace
-	4525708316	• Stiffener	1	7075-T76 Clad	0.040	F3-8	Replace
1641	4525708315	• Angle	1	2024-T3 Clad	0.040	F3-8	Replace
1644	4525708313	• Stiffener, Lwr Battery Shelf (2 ea.)	1	7075-T76 Clad	0.040	F3-8	Replace
1647	4525708311	• Stiffener, Upper Battery Shelf (2 ea.)	1	7075-T76 Clad	0.040	F3-8	Replace
1650	4525708310	• Angle, Equipment Restraint	1	7075-T76 Clad	0.050	F3-8	Replace
1653	4525708309	• Mounting Plate, Equipment	1	2024-T3 Clad	0.040	F3-8	Replace
1656	4525708307	• Angle	1	7075-T76 Clad	0.050	F3-8	Replace
1659	4525708306	• Angle	1	7075-T76 Clad	0.050	F3-8	Replace
1662	4525708305	• Angle	1	7075-T76 Clad	0.050	F3-8	Replace
1665	4525708301	• Cleat	1	2024-T3 Clad	0.040	F3-8	Replace
1668	4525708283	• Support Angle, Fwd	1	7075-T76 Clad	0.050	F3-8	Replace
1671	4525708281	• Cleat, Upper Bulkhead	1	2024-T3 Clad	0.040	F3-8	Replace
1674	4525708280	• Stiffener, Equipment Mounting	1	7075-T76 Clad	0.040	F3-8	Replace
1677	4525708279	• Cleat, Equipment Mounting.	1	2024-T3 Clad	0.040	F3-8	Replace
1680	4525708278	• Plate	1	2024-T3 Clad	0.040	F3-8	Replace
1683	4525708277	• Splice Joint FS 596.79	1	2024-T42 Clad	0.040	F3-8	Replace
1686	4525708276	• Cleat FS 596.79	1	2024-T3 Clad	0.040	F3-8	Replace
1689	4525708275	• Cleat FS 591.23	1	2024-T3 Clad	0.040	F3-8	Replace
1692	4525708274	• Intercostal	1	7075-T76 Clad	0.040	F3-8	Replace
1695	4525708273	• Support	1	7075-T76 Clad	0.040	F3-8	Replace
1698	4525708272	• Support	1	7075-T76 Clad	0.050	F3-8	Replace
1701	4525708271	• Support	1	7075-T76 Clad	0.050	F3-8	Replace
1704	4525708270	• Mounting Angle, Battery Shelf	1	7075-T76 Clad	0.050	F3-8	Replace
1707	4525708269	• Angle, Upper Battery Support	1	7075-T76 Clad	0.040	F3-8	Replace
1710	4525708268	• Shelf, Upper Battery	1	2024-T3 Clad	0.063	F3-8	Replace
1713	4525708266	• Corner Cleat (2 ea.)	1	2024-T42 Clad	0.063	F3-8	Replace
-	4525708265	• Angle, Upper Bulkhead	1	7075-T76 Clad	0.040	F3-8	Replace
-	4525708264	• Angle, Lwr Bulkhead	1	7075-T76 Clad	0.040	F3-8	Replace
-	4525708263	• Angle, Lwr Bulkhead	1	7075-T76 Clad	0.040	F3-8	Replace
		- Not Illustrated					

Aft Fuselage Assembly Repair Index
Table 1 (Sheet 19 of 27)

ITEM NO.	DWG. NO.	DESCRIPTION	EFF CODE	MATERIAL	GAGE	FINISH CODE	REPAIR FIG. NO.
-	4525708262	• Cleat, Lwr Shelf	1	2024-T3 Clad	0.040	F3-8	Replace
-	4525708261	• Cleat Frame 47	1	2024-T3 Clad	0.040	F3-8	Replace
-	4525708260	• Cleat	1	2024-T3 Clad	0.040	F3-8	Replace
1734	4525708259	• Angle, Lwr Battery Shelf	1	7075-T76 Clad	0.040	F3-8	Replace
1737	4525708258	• Angle, Battery Shelf	1	7075-T76 Clad	0.040	F3-8	Replace
1740	4525708257	• Cleat FS 602.46	1	2024-T3 Clad	0.040	F3-8	Replace
-	4525708256	• Support Angle	1	7075-T76 Clad	0.050	F3-8	Replace
1746	4525708255	• Intercostal, Lwr	1	7075-T76 Clad	0.040	F3-8	Replace
1749	4525708254	• Post, Aft Vertical	1	7075-T76 Clad	0.050	F3-8	Replace
1752	4525708253	• Post, Vertical	1	7075-T76 Clad	0.050	F3-8	Replace
1755	4525708252	• Post, Vertical	1	7075-T76 Clad	0.040	F3-8	Replace
-	4524608110	• Strap, Primary Ground FS 591.00	1	-	-	-	-
-	4524608107	• • Strap	1	28	0.125	F1-10	Replace
-	4524608108	• • Doubler	1	2024-T3 Clad	0.040	F3-8	Replace
-	4524408012	• Cleat, LH & RH Aft Ground Power Receptacle	1	2024-T42 Clad	0.080	F3-8	Replace
-	4524408011	• Support Bracket, Ground Power Receptacle	1	2024-T3 Clad	0.080	F3-8	Replace
-	4524408010	• Diaphragm, Ground Power Receptacle	1	2024-T3 Clad	0.040	F3-8	Replace
-	4524408009	• Safety Guard, Ground Power Receptacle	1	2024-T42 Clad	0.040	F3-8	Replace
-	4524408008	• Cleat, Ground Power Receptacle	1	2024-T3 Clad	0.040	F3-8	Replace
-	4524408007	• Bracket, Ground Power Receptacle	1	2024-T3 Clad	0.040	F3-8	Replace
-	4524408005	• Cleat (2 ea.)	1	2024-T3 Clad	0.040	F3-8	Replace
-	4524308209	• Strip (4 ea.)	3	29	0.100	F0-10	Replace
-	4524308210	• Strip (4 ea.)	3	29	0.100	F0-10	Replace
-	4524308212	• Strip (4 ea.)	3	29	0.100	F0-10	Replace
1797	4521502048	• ACM Exhaust Assy.	1	-	-	-	-
-	4521502041	• • Filter Assy.	1	-	-	-	-
-	4521502039	• • • Ring	1	4	0.050	F1-10	Replace
-	4521502008	• • • Mesh	1	30	0.041	F1-10	Replace
		- Not Illustrated					

Aft Fuselage Assembly Repair Index
Table 1 (Sheet 20 of 27)

ITEM NO.	DWG. NO.	DESCRIPTION	EFF CODE	MATERIAL	GAGE	FINISH CODE	REPAIR FIG. NO.
-	4521502042	• • Duct, Lwr Assy.	1	-	-	-	-
-	4521502031	• • • Duct Assy., Lwr	1	-	-	-	-
-	4521502043	• • • • Duct Half	1	6061-T4	0.032	F1-10	Replace
-	4521502044	• • • • Flange	1	6061-T4	0.032	F1-10	Replace
-	4521502009	• • • Duct	1	6061-T4	0.032	F1-10	Replace
-	4521502010	• • • Flange	1	6061-T4	0.032	F1-10	Replace
-	4521502034	• • • Flange	1	6061-T4	0.032	F1-10	Replace
-	4521502012	• • Duct, Upper Assy.	1	-	-	-	-
-	4521502033	• • • Duct Assy., Lwr	1	-	-	-	-
-	4521502046	• • • • Duct Half	1	6061-T4	0.032	F1-10	Replace
-	4521502047	• • • Flange	1	6061-T4	0.032	F1-10	Replace
-	4521502011	• • • Flange	1	6061-T4	0.028	F1-10	Replace
-	4521502035	• • • Flange	1	6061-T4	0.032	F1-10	Replace
-	4521502036	• • • Flange	1	6061-T4	0.032	F1-10	Replace
-	4521502037	• • • Flange	1	6061-T4	0.032	F1-10	Replace
-	4521502038	• • • Flange	1	6061-T42	0.032	F1-10	Replace
1857	7621502001	• Seal	1	31	-	F0-10	Replace
-	4521302104	• Bracket	1	2024-T3 Clad	0.032	F3-8	Replace
-	4521202214	• Bracket, Plenum FS 510.00	1	2024-T3 Clad	0.032	F3-8	Replace
-	4533308007	• Bracket, Switch Mounting	1	2024-T3 Clad	0.032	F3-8	Replace
-	4520008299	• Stiffener, RH Relay Panel	1	2024-T3 Clad	0.050	F3-8	Replace
-	4520008278	• Bracket, RH Lwr Relay Panel	1	2024-T3 Clad	0.050	F3-8	Replace
-	4520008277	• Bracket, RH Upper Relay Panel	1	2024-T3 Clad	0.050	F3-8	Replace
-	4520008276	• Bracket, RH Lwr Relay Panel	1	2024-T3 Clad	0.050	F3-8	Replace
-	4520008275	• Bracket, RH Upper Relay Panel	1	2024-T3 Clad	0.050	F3-8	Replace
-	4520008269	• Bracket, RH	1	2024-T3 Clad	0.050	F3-8	Replace
-	4520008268	• Bracket	1	2024-T3 Clad	0.040	F3-8	Replace
-	4520008267	• Bracket, RH FS 538	1	2024-T3 Clad	0.040	F3-8	Replace
-	4520008263	• Bracket, LH FS 614	1	2024-T42 Clad	0.040	F3-8	Replace
-	4520008262	• Bracket, LH	1	2024-T3 Clad	0.040	F3-8	Replace
-	4520008261	• Bracket, LH	1	2024-T3 Clad	0.040	F3-8	Replace
		- Not Illustrated					

Aft Fuselage Assembly Repair Index
Table 1 (Sheet 21 of 27)

ITEM NO.	DWG. NO.	DESCRIPTION	EFF CODE	MATERIAL	GAGE	FINISH CODE	REPAIR FIG. NO.
-	4520008260	• Bracket, LH	1	2024-T3 Clad	0.040	F3-8	Replace
-	4520008259	• Bracket, LH	1	2024-T3 Clad	0.040	F3-8	Replace
-	4552300208	• Shim, Laminated	3	8	0.054	-	Replace
-	4552300209	• Shim, Laminated	3	8	0.062	-	Replace
-	4552300212	• Hinge	3	-	-	-	-
-	4552300216	• • Plate, Hinge	3	4	0.040	F1-10	Replace
-	4552300217	• • Seal Block	3	23	-	F0-10	Replace
-	4552300213	• Hinge	3	-	-	-	-
-	4552300259	• • Hinge Plate	3	4	0.040	F1-10	Replace
-	4552300261	• • Seal Block	3	23		F0-10	Replace
-	4552300214	• Hinge	3	-	-	-	-
-	4552300262	• • Hinge Plate	3	4	0.040	F1-10	Replace
-	4552300275	• • Seal Block	3	23		F0-10	Replace
-	4552300215	• Hinge	3	-	-	-	-
-	4552300297	• • Hinge Plate	3	4	0.040	F1-10	Replace
-	4552300298	• • Seal Block	3	23	-	F0-10	Replace
-	4552300218	• Splice Plate	3	7075-T7351	0.080	F3-8	Replace
-	4552300219	• Shim, Laminated	3	8	0.060	F3-8	Replace
-	4552300222	• Seal Carrier, Sill	3	2024-T42 Clad	0.040	F3-8	Replace
-	4552300223	• Seal Carrier	3	2024-T42 Clad	0.040	F3-8	Replace
-	4552300224	• Seal Carrier FS 580.80	3	2024-T42 Clad	0.040	F3-8	Replace
-	4552300225	• Seal Carrier FS 546.16	3	2024-T42 Clad	0.040	F3-8	Replace
-	4552300226	• Seal Carrier, Aft Upper Corner	3	2024-T42 Clad	0.040	F3-8	Replace
-	4552300227	• Seal Carrier, Aft Lwr Corner	3	2024-T42 Clad	0.040	F3-8	Replace
-	4552300228	• Seal Carrier, Fwd Upper Corner	3	2024-T42 Clad	0.040	F3-8	Replace
-	4552300229	• Seal Carrier, Fwd Lwr Corner	3	2024-T42 Clad	0.040	F3-8	Replace
-	4552300234	• Keeper Fitting	3	Nylon L-P-410	0.540	F1-10	Replace
-	4552300237	• Latch Seal	3	-	-	-	-
-	4552300238	• • Plate, Latch Seal	3	4	0.040	F1-10	Replace
-	4552300239	• • Seal Block	3	23	-	F0-10	Replace
-	4552300240	• • Seal Block	3	23	-	F0-10	Replace
-	4552300260	• • Guide Plate	3	4	0.040	F1-10	Replace
		- Not Illustrated					

Aft Fuselage Assembly Repair Index
Table 1 (Sheet 22 of 27)

ITEM NO.	DWG. NO.	DESCRIPTION	EFF CODE	MATERIAL	GAGE	FINISH CODE	REPAIR FIG. NO.
-	4552300241	• Latch Seal	3	-	-	-	-
-	4552300242	• • Plate	3	4	0.040	F1-10	Replace
-	4552300243	• • Seal Block	3	23	-	F0-10	Replace
-	4552300244	• • Seal Block	3	23	-	F0-10	Replace
-	4552300245	• Hinge Assy., Upper	3	7475-T7351 32	1.500	F3-8	Replace
-	4552300246	• Hinge Assy., Lower	3	7475-T7351 32	1.500	F3-8	Replace
-	4552300247	• Splice Bracket	3	7475-T7351	1.250	F3-8	Replace
-	4552300248	• Housing, Door Latch	3	7075-T7351	2.500	F3-8	Replace
-	4552300249	• Housing, Door Latch	3	7075-T7351	2.500	F3-8	Replace
-	4552300250	• Throat Plate	3	7075-T7351	2.500	F3-8	Replace
-	4552300251	• Seal, Upper	3	33	-	F0-10	Replace
-	4552300252	• Seal, Lwr	3	33	-	F0-10	Replace
-	4552300253	• Seal, Fwd	3	33	-	F0-10	Replace
-	4552300254	• Seal, Aft	3	33	-	F0-10	Replace
-	4552300255	• Shim, Laminated	3	8	0.054	F0-10	Replace
-	4552300256	• Shim, Laminated	3	8	0.060	F0-10	Replace
-	4552300257	• Shim, Laminated	3	8	0.060	F0-10	Replace
-	4552300258	• Shim, Laminated	3	8	0.060	F0-10	Replace
-	4552300266	• Angle, Lwr	3	7075-T7351	1.500	F3-8	Replace
-	4552300267	• Cleat, Fwd Lwr	3	7075-T6	0.050	F3-8	Replace
-	4552300268	• Cleat, Aft Lwr	3	7075-T6	0.050	F3-8	Replace
-	4552300269	• Angle FS 546.16	3	2024-T42 Clad	0.020	F3-8	Replace
-	4552300270	• Angle FS 546.16	3	2024-T42 Clad	0.020	F3-8	Replace
-	4552300271	• Angle FS 546.16	3	2024-T42 Clad	0.020	F3-8	Replace
-	4552300272	• Angle FS 546.16	3	2024-T42 Clad	0.020	F3-8	Replace
-	4552300293	• Intercostal FS 546.16	3	2024-T42 Clad	0.032	F3-8	Replace
-	4552300294	• Angle FS 546.16	3	2024-T42 Clad	0.020	F3-8	Replace
-	4552300295	• Splice Strap	3	7075-T6	0.063	F3-8	Replace
-	4552300296	• Sill, Intercostal	3	7075-T6	0.050	F3-8	Replace
-	4552300305	• Hinge Bracket Assy., Upper	3	7475-T7351 32	2.750	F3-8	Replace
-	4552300306	• Hinge Bracket Assy., Lwr	3	7475-T7351 32	2.750	F3-8	Replace
-	4552300075	• Bracket FS 546.16	3	7475-T7351	0.632	F3-8	Replace
-	4552405191	• Seal Carrier, Aft Corner	3	2024-T42 Clad	0.040	F3-8	Replace
		- Not Illustrated					

Aft Fuselage Assembly Repair Index
Table 1 (Sheet 23 of 27)

ITEM NO.	DWG. NO.	DESCRIPTION	EFF CODE	MATERIAL	GAGE	FINISH CODE	REPAIR FIG. NO.
-	4552405192	• Seal Carrier, Lwr	3	2024-T3 Clad	0.040	F3-8	Replace
-	4552405193	• Seal Carrier, Fwd Corner	3	2024-T42 Clad	0.040	F3-8	Replace
-	4552405194	• Seal Carrier, Fwd	3	2024-T42 Clad	0.040	F3-8	Replace
-	4552405195	• Seal Carrier, Fwd Corner	3	2024-T42 Clad	0.040	F3-8	Replace
-	4552405196	• Seal Carrier, Aft	3	2024-T42 Clad	0.040	F3-8	Replace
-	4552405197	• Seal Carrier, Aft Corner	3	2024-T42 Clad	0.040	F3-8	Replace
-	4552405198	• Seal Carrier, Upper	3	2024-T3 Clad	0.040	F3-8	Replace
-	4552405157	• Bracket, Lanyard	3	7075-T7351	1.500	F3-8	Replace
-	4552405172	• Fitting, Lock Keeper	3	Nylon 6-6 L-P-410	0.540	F0-10	Replace
-	4552405161	• Latch Seal Sub. Assy., Aft	3	-	-	-	-
-	4552405199	• • Plate, Latch Seal	3	4	0.040	F1-10	Replace
-	4552405163	• • Seal Block	3	23		F0-10	Replace
-	4552405160	• • Guide Plate	3	4	0.040	F1-10	Replace
-	4552405166	• Latch Seal Sub. Assy., Fwd	3	-	-	-	-
-	4552405162	• • Plate, Latch Seal	3	4	0.040	F1-10	Replace
-	4552405163	• • Seal Block	3	23	-	F0-10	Replace
-	4552405160	• • Guide Plate	3	4	0.040	F1-10	Replace
-	4552405164	• Seal	3	33	-	F0-10	Replace
-	4552405165	• Seal	3	33	-	F0-10	Replace
-	4552405180	• Housing, Door Latch, Fwd	3	7075-T7351	1.500	F3-8	Replace
-	4552405181	• Housing, Door Latch, Aft	3	7075-T7351	1.500	F3-8	Replace
-	4553508101	• Strip, Phenolic	3	34	-	F0-10	Replace
-	4553508102	• Strip, Phenolic	3	34	-	F0-10	Replace
-	4553508103	• Strip, Phenolic	3	34	-	F0-10	Replace
-	4553508104	• Strip, Phenolic	3	34	-	F0-10	Replace
-	4553508105	• Strip, Phenolic	3	34	-	F0-10	Replace
-	4553508106	• Strip, Phenolic	3	34	-	F0-10	Replace
-	4553508107	• Strip, Phenolic	3	34	-	F0-10	Replace
-	4553508108	• Strip, Phenolic	3	34	-	F0-10	Replace
-	4553508109	• Strip, Phenolic	3	33	-	F0-10	Replace
-	4553508110	• Strip, Phenolic	3	34	-	F0-10	Replace
-	4553508111	• Strip, Phenolic	3	34	-	F0-10	Replace
-	4553508112	• Strip, Phenolic	3	34	-	F0-10	Replace
		- Not Illustrated					

Aft Fuselage Assembly Repair Index
Table 1 (Sheet 24 of 27)

ITEM NO.	DWG. NO.	DESCRIPTION	EFF CODE	MATERIAL	GAGE	FINISH CODE	REPAIR FIG. NO.
-	4553508113	• Strip, Phenolic	3	34	-	F0-10	Replace
-	4553508114	• Strip, Phenolic	3	34	-	F0-10	Replace
-	4553508115	• Strip, Phenolic	3	34	-	F0-10	Replace
-	4553508116	• Strip, Phenolic	3	34	-	F0-10	Replace
-	4553508117	• Strip, Phenolic	3	34	-	F0-10	Replace
-	4553508118	• Strip, Phenolic	3	34	-	F0-10	Replace
-	4553508119	• Strip, Phenolic	3	34	-	F0-10	Replace
-	4553508120	• Strip, Phenolic	3	34	-	F0-10	Replace
-	4553508121	• Strip, Phenolic	3	34	-	F0-10	Replace
-	4553508122	• Strip, Phenolic	3	34	-	F0-10	Replace
-	4553508123	• Strip, Phenolic	3	34	-	F0-10	Replace
-	4553508124	• Strip, Phenolic	3	34	-	F0-10	Replace
-	4553508125	• Strip, Phenolic	3	34	-	F0-10	Replace
-	4553508126	• Strip, Phenolic	3	34	-	F0-10	Replace
-	4553508127	• Strip, Phenolic, Upper	3	34	-	F0-10	Replace
-	4553508128	• Strip, Phenolic, Lwr	3	34	-	F0-10	Replace
-	4553508129	• Strip, Phenolic	3	34	-	F0-10	Replace
-	4553508130	• Strip, Phenolic	3	34	-	F0-10	Replace
-	4553508131	• Strip, Phenolic, Upper	3	34	-	F0-10	Replace
-	4553508132	• Strip, Phenolic, Lwr	3	34	-	F0-10	Replace
-	4553508133	• Strip, Phenolic	3	34	-	F0-10	Replace
-	4553508134	• Strip, Phenolic	3	34	-	F0-10	Replace
-	4553508135	• Strip, Phenolic, Upper	3	34	-	F0-10	Replace
-	4553508136	• Strip, Phenolic, Lwr	3	34	-	F0-10	Replace
-	4553508137	• Strip, Phenolic	3	34	-	F0-10	Replace
-	4553508138	• Strip, Phenolic	3	34	-	F0-10	Replace
-	4553508139	• Strip, Phenolic	3	34	-	F0-10	Replace
-	2502000-2	• Angle	3	35	-	-	Replace
-	2502000-3	• Plate	3	2024-T3 Clad	0.250	F3-8	Replace
-	2502000-4	• Clip	3	35	-	-	-
		- Not Illustrated					

Aft Fuselage Assembly Repair Index
Table 1 (Sheet 25 of 27)

EFFECTIVITY CODE	AIRCRAFT SERIAL NUMBERS
1	45-005 AND SUBSEQUENT
2	45-005 THRU 45-026
3	45-027 AND SUBSEQUENT
4	45-012 AND SUBSEQUENT
5	45-005 THRU 45-018

NOTES

1. Tube, 0.375 Dia., 0.028 Wall
2. AISI 321 Tube
3. AISI 321, MIL-T-8808, Tube, 2.00 Dia.,0.032
4. AISI 321(AMS 5510)
5. F3-8 exterior, F4 Interior
6. Tiernay, Ref. No. 60-1372, Extrusion
7. SB07 01 156
8. M22499/3 - 009
9. TI-6AL-4V Annealed, outside F1-8, inside chemical clean only
10. SB07 02 502
11. SB07 02 503
12. SB07 02 110
13. SB07 02 501
14. Terelene Silicone SB03 04 003
15. Velcro PN FR Clerical Gray Loop 25 mm
16. Velcro #800 loop "Wide Black" 008 fire retardant, pressure sensitive nylon
17. Aluminum honeycomb, SMS 58, Class 1, Type 1, Gr. 2
18. Silastic Silicone, SB03 04 013
19. Nomex Honeycomb, SMS 35, Class 1, Type 1, 48-16 mm thick
20. Carbon fiber, SMS 30, Class 2, Type 4
21. Finish F3-7 interior, F3 exterior
22. SB03 04 021
23. Silicone Foam, 1-Ply Outer Cover, TS291 (Bestobell Aviation)
24. Aluminum Bronze, AMS 4640
25. Extruded channel 60-6164
26. TS268 A (T1601 Knitted Terylene Fabric, coated with S466 Silicone Elastomer)
27. MS20001-5 Hinge

Aft Fuselage Assembly Repair Index
Table 1 (Sheet 26 of 27)

NOTES

28> Unalloyed Copper AMS 4501

29> BS 6564, Grade A, Type 1

30> AISI 304, Light Mesh 2, ASTM E437 Plain Weave

31> Glass Fiber Impregnated Silicone Rubber, BA 7780 (Bestbell Aviation)

32> KAF 0405 P Bearing (2 ea.) KA 0404 P (AMPEP) 1 ea. MS20209F1-20 Insert

33> S-304 Seal

34> T-992 Foiled Strip 0.050 x 0.800

35> S-549 Extrusion

36> S-502 Extrusion

Aft Fuselage Assembly Repair Index
Table 1 (Sheet 27 of 27)

AFT FUSELAGE ASSEMBLY - ALLOWABLE DAMAGE

1. Allowable Damage Limits

NOTE: All dimensions are in inches unless otherwise specified.

A. Fasteners
(1) Loose or failed rivets are not allowed. A loose or failed rivet can cause increased stress concentrations on the remaining rivets and lead to progressive joint failure. A careful inspection must be performed to ensure that joint failure has not spread from the area of the loose or failed rivet. (Refer to 51-40-05 for definition of rivet failure.)
(2) Loose or failed screws are not allowed. A loose or failed screw can cause increased stress concentrations on surrounding screws and lead to progressive joint failure. A careful inspection must be performed to ensure that the joint failure has not spread from the area of the loose or failed screw.

B. Cracks
(1) Cracks in any fitting or forging are not allowed. Cracked fittings or forgings must be replaced.
(2) Cracks in components other than fittings and forgings are considered allowable if properly repaired and refinished in accordance with 51-70-00.

C. Deformation
(1) Deformation of the aft fuselage structure is not allowed.

D. Corrosion (See Figure 101.)
(1) Corrosion damage is permissible if the affected area is properly repaired, refinished in accordance with 51-30-15 and these repairs do not reduce the original material thickness more than specified. (Refer to 51-70-00.)
(2) Structural components must be repaired or replaced if corrosion repair reduces the original material thickness more than specified.

E. Dents
(1) Dents are permissible if smooth and without abrupt changes in contour, do not exceed 0.100 inch (2.54 mm) in depth, do not exceed 10% of total surface area in one (1) square foot, and are not closer than 0.50 inch (12.7 mm) to any rivet or structural area.
(2) Dents are not allowed if sharp, a fracture of the skin has occurred greater than 0.100 inch (2.54 mm) in depth, exceeds 10% of the total surface area in one (1) square foot, and are closer than 0.50 inch (12.7 mm) to a rivet or structural area. Such dents shall be repaired or the component replaced.

F. Scratches (See Figure 101.)
(1) Scratches are permissible if the affected area is sanded smooth, refinished in accordance with 51-70-00, and the repairs do not reduce the original material thickness more than specified. (Refer to 51-30-15 for protective treatment procedures.)
(2) Structural components must be replaced or repaired if scratches reduce the original material thickness by more than specified.

G. Nicks (See Figure 101.)
   (1) Nicks are permissible if the affected area is sanded smooth, refinished in accordance with 51-70-00, and the repairs do not reduce the original material thickness more than specified. (Refer to 51-30-15 for protective treatment procedures.)
   (2) Structural components must be replaced or repaired if nicks reduce the original material thickness more than specified.

H. Fittings and Forgings
   (1) Fittings or forgings must be replaced if cracked or if fitting hole (non-bushed) tolerance exceeds the allowable limits. (Refer to 51-70-00.)
   (2) Fittings or forgings with bushing shall be repaired.

Nominal Thickness (Inch)	Minimum Thickness (Inch)
0.016	0.0135
0.020	0.0175
0.025	0.0225
0.032	0.0295
0.040	0.0370
0.050	0.0460
0.063	0.0590
0.071	0.0670
0.080	0.0760
0.100	0.0950
0.125	0.1200
0.190	0.1800
0.250	0.2370

Allowable Material Thickness
Figure 101

AFT FUSELAGE ASSEMBLY - REPAIR

1. Repairs

A. Refer to 51-70-00 for typical repairs and allowable wear and repair data.

AFT FUSELAGE FRAMES - STRUCTURAL IDENTIFICATION

1. Description (See Figure 1 and Table 1.)

A. The aft fuselage frames consists of frame assemblies and doublers structural subassemblies. The aft fuselage frames begin at FS 503.68 and continue through FS 614.21.

B. The aft fuselage frames provide overall structural continuity and aerodynamics of the aircraft.

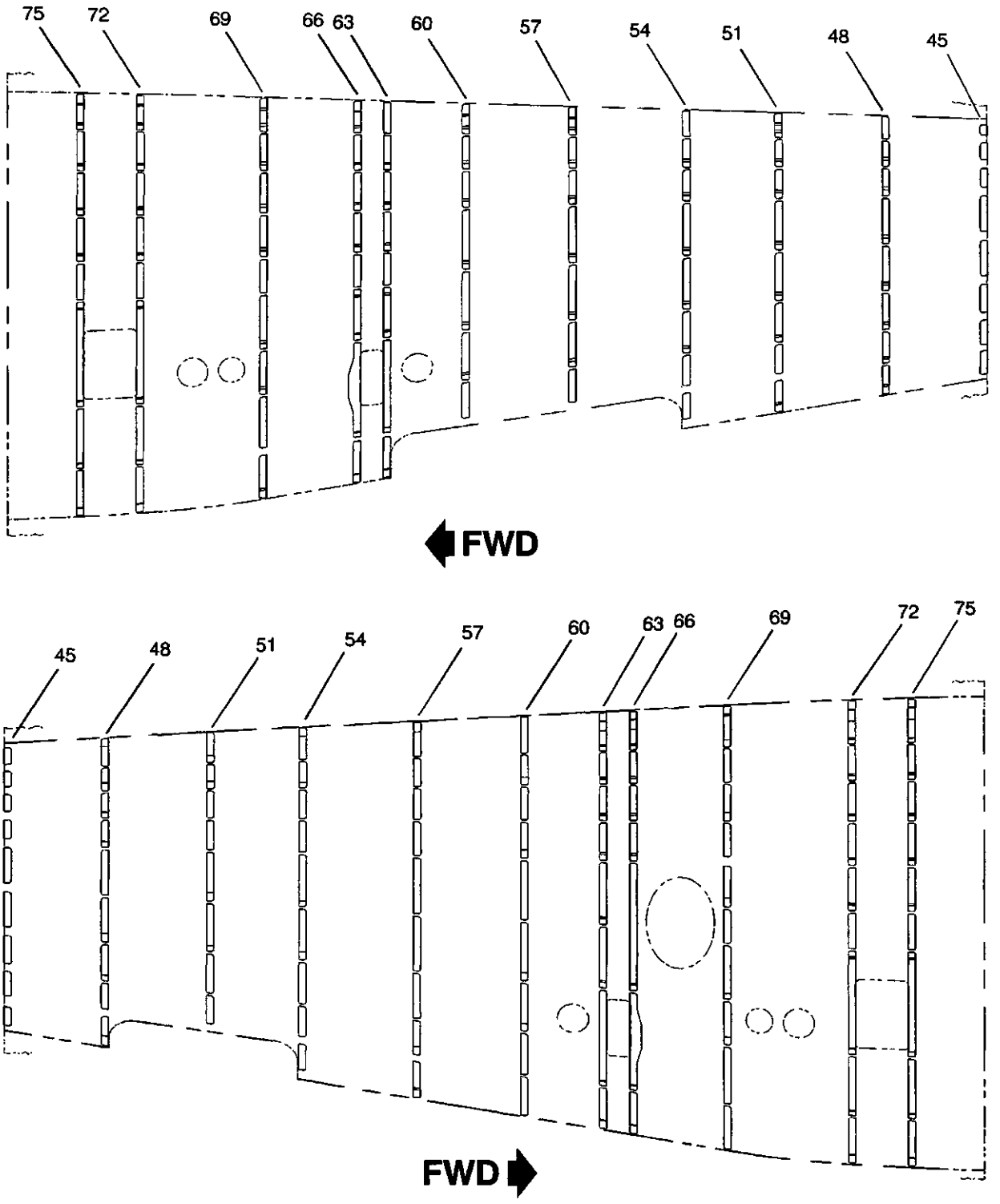

S45-534010-001-01

Aft Fuselage Frames Repair Index
Figure 1

ITEM NO.	DWG. NO.	DESCRIPTION	EFF CODE	MATERIAL	GAGE	FINISH CODE	REPAIR FIG. NO.
		Aft Fuselage Frames					
-	4553005001	Aft Fuselage Assy.	1	-	-	-	-
-	4553005002	• Lower Panel Assy.	1	-	-	-	-
-	4553504901	• • Frame, Lwr FS 614.21	1	2024-T42 Clad	0.040	F3-8	Replace
-	4553504801	• • Frame, Lwr FS 602.46	1	7075-T76 Clad	0.040	F3-8	Replace
-	4553504726	• • Frame, Lwr FS 596.79	1	7075-T76 Clad	0.050	F3-8	Replace
-	4553504701	• • Frame, Lwr FS 591.23	1	2024-T42 Clad	0.040	F3-8	Replace
-	4553504613	• • Doubler, Lwr Skin RH	1	2024-T3 Clad	0.040	F3-8	Replace
-	4553504612	• • Doubler, Lwr Skin LH	1	2024-T3 Clad	0.040	F3-8	Replace
-	4553504601	• • Frame, Lwr FS 580.80	1	7075-T76 Clad	0.040	F3-8	Replace
-	4553504501	• • Frame, Lwr FS 567.91	1	2024-T42 Clad	0.040	F3-8	Replace
-	4553504401	• • Frame, Lwr FS 555.81	1	7075-T76 Clad	0.063	F3-8	Replace
-	4553504301	• • Frame, Lwr FS 546.15	1	7075-T76 Clad	0.063	F3-8	Replace
-	4553504201	• • Frame, Lwr FS 543.55	1	7075-T76 Clad	0.063	F3-8	Replace
-	4553504101	• • Frame, Lwr FS 533.00	1	2024-T42 Clad	0.040	F3-8	Replace
-	4553504026	• • Frame, Lwr FS 524.85	1	2024-T42 Clad	0.040	F3-8	Replace
-	4553504001	• • Frame, Lwr FS 518.20	1	7475-T7351	-	F3-8	Replace
-	4553503901	• • Frame, Lwr FS 512.25	1	7475-T7351	-	F3-8	Replace
	4553005006	• Upper Panel Assy.	1	-	-	-	-
-	4553508028	• • Doubler, Frame	1	2024-T3 Clad	0.040	F3-8	Replace
45	4553504951	• • Frame, FS 614.21	1	2024-T42 Clad	0.040	F3-8	Replace
48	4553504851	• • Frame, FS 602.46	1	2024-T42 Clad	0.040	F3-8	Replace
51	4553504751	• • Frame, FS 591.23	1	2024-T42 Clad	0.040	F3-8	Replace
54	4553504651	• • Frame, FS 580.80	1	7075-T76 Clad	0.040	F3-8	Replace
57	4553504553	• • Frame, FS 567.91	1	2024-T42 Clad	0.040	F3-8	Replace
60	4553504453	• • Frame, FS 555.81	1	2024-T42 Clad	0.040	F3-8	Replace
63	4553504353	• • Frame, FS 546.15	1	7475-T7351	-	F3-8	Replace
66	4553504251	• • Frame, FS 543.55	1	7475-T7351	-	F3-8	Replace
69	4553504153	• • Frame, FS 533.00	1	2024-T42 Clad	0.040	F3-8	Replace
72	4553504053	• • Frame, FS 518.20	1	7475-T7351	-	F3-8	Replace
75	4553503951	• • Frame, FS 512.25	1	7475-T7351	-	F3-8	Replace
-	4553504903	• Splice Plate, LH & RH FS 614.21	1	2024-T42 Clad	0.040	F3-8	Replace
		- Not Illustrated					

Aft Fuselage Frames Repair Index
Table 1 (Sheet 1 of 2)

ITEM NO.	DWG. NO.	DESCRIPTION	EFF CODE	MATERIAL	GAGE	FINISH CODE	REPAIR FIG. NO.
-	4553504808	• Splice Angle FS 602.46	1	2024-T42 Clad	0.040	F3-8	Replace
-	4553504805	• Splice Plate, RH FS 602.46	1	2024-T42 Clad	0.040	F3-8	Replace
-	4553504804	• Splice Plate, RH FS 602.46	1	2024-T42 Clad	0.040	F3-8	Replace
-	4553504803	• Splice Plate, LH FS 602.46	1	2024-T42 Clad	0.040	F3-8	Replace
-	4553504704	• Splice Angle FS 591.23	1	2024-T42 Clad	0.040	F3-8	Replace
-	4553504703	• Splice Plate FS 591.23	1	2024-T42 Clad	0.040	F3-8	Replace
-	4553504611	• Splice Angle FS 580.76	1	2024-T42 Clad	0.040	F3-8	Replace
-	4553504606	• Packer FS 580.76	1	2024-T3 Clad	0.063	F3-8	Replace
-	4553504504	• Splice Angle FS 567.91	1	2024-T42 Clad	0.040	F3-8	Replace
-	4553504503	• Splice Plate FS 567.91	1	2024-T42 Clad	0.040	F3-8	Replace
-	4553504404	• Splice Angle FS 555.81	1	2024-T42 Clad	0.040	F3-8	Replace
-	4553504403	• Splice Plate FS 555.81	1	2024-T42 Clad	0.040	F3-8	Replace
-	4553504304	• Splice Angle, LH & RH FS 546.15	1	2024-T42 Clad	0.063	F3-8	Replace
-	4553504303	• Splice Plate, LH & RH FS 546.15	1	7075-T76 Clad	0.063	F3-8	Replace
-	4553504204	• Splice Angle, LH & RH FS 543.55	1	2024-T42 Clad	0.063	F3-8	Replace
-	4553504203	• Splice Plate, LH & RH FS 543.55	1	7075-T76 Clad	0.063	F3-8	Replace
-	4553504104	• Splice Angle, LH & RH FS 533.00	1	2024-T42 Clad	0.040	F3-8	Replace
-	4553504103	• Splice Plate, LH & RH FS 533.00	1	2024-T42 Clad	0.040	F3-8	Replace
-	4553504004	• Splice Angle, LH & RH FS 518.20	1	2024-T42 Clad	0.063	F3-8	Replace
-	4553504003	• Splice Plate, LH & RH FS 518.20	1	7075-T76 Clad	0.063	F3-8	Replace
-	4553503904	• Splice Angle, LH & RH FS 512.54	1	2024-T42 Clad	0.063	F3-8	Replace
-	4553503903	• Splice Plate, LH & RH FS 512.54	1	7075-T76 Clad	0.063	F3-8	Replace
-	4552300074	• Bracket, Lwr FS 580.80	1	2024-T42 Clad	0.040	F3-8	Replace
-	4552300221	• Frame FS 546.15	1	7075-T7351	1.250	F3-8	Replace
		- Not Illustrated					

EFFECTIVITY CODE	AIRCRAFT SERIAL NUMBERS
1	45-005 AND SUBSEQUENT

Aft Fuselage Frames Repair Index
Table 1 (Sheet 2 of 2)

AFT FUSELAGE FRAMES - ALLOWABLE DAMAGE

1. Allowable Damage Limits

NOTE: All dimensions are in inches unless otherwise specified.

A. Fasteners
(1) Loose or failed rivets are not allowed. A loose or failed rivet can cause increased stress concentrations on the remaining rivets and lead to progressive joint failure. A careful inspection must be performed to ensure that joint failure has not spread from the area of the loose or failed rivet. (Refer to 51-40-05 for definition of rivet failure.)
(2) Loose or failed screws are not allowed. A loose or failed screw can cause increased stress concentrations on surrounding screws and lead to progressive joint failure. A careful inspection must be performed to ensure that the joint failure has not spread from the area of the loose or failed screw.

B. Cracks
(1) Cracks in any fitting or forging are not allowed. Cracked fittings or forgings must be replaced.
(2) Cracks in components other than fittings and forgings are considered allowable if properly repaired and refinished in accordance with 51-70-00.

C. Deformation
(1) Deformation of the aft fuselage frame structure is not allowed.

D. Corrosion (See Figure 101.)
(1) Corrosion damage is permissible if the affected area is properly repaired, refinished in accordance with 51-30-15 and these repairs do not reduce the original material thickness more than specified. (Refer to 51-70-00.)
(2) Structural components must be repaired or replaced if corrosion repair reduces the original material thickness more than specified.

E. Dents
(1) Dents are permissible if smooth and without abrupt changes in contour, do not exceed 0.100 inch (2.54 mm) in depth, do not exceed 10% of total surface area in one (1) square foot, and are not closer than 0.50 inch (12.7 mm) to any rivet or structural area.
(2) Dents are not allowed if sharp, a fracture of the skin has occurred greater than 0.100 inch (2.54 mm) in depth, exceeds 10% of the total surface area in one (1) square foot, and are closer than 0.50 inch (12.7 mm) to a rivet or structural area. Such dents shall be repaired or the component replaced.

F. Scratches (See Figure 101.)
(1) Scratches are permissible if the affected area is sanded smooth, refinished in accordance with 51-70-00, and the repairs do not reduce the original material thickness more than specified. (Refer to 51-30-15 for protective treatment procedures.)
(2) Structural components must be replaced or repaired if scratches reduce the original material thickness by more than specified.

G. Nicks (See Figure 101.)
   (1) Nicks are permissible if the affected area is sanded smooth, refinished in accordance with 51-70-00, and the repairs do not reduce the original material thickness more than specified. (Refer to 51-30-15 for protective treatment procedures.)
   (2) Structural components must be replaced or repaired if nicks reduce the original material thickness more than specified.

H. Fittings and Forgings
   (1) Fittings or forgings must be replaced if cracked or if fitting hole (non-bushed) tolerance exceeds the allowable limits. (Refer to 51-70-00.)
   (2) Fittings or forgings with bushing shall be repaired.

Nominal Thickness (Inch)	Minimum Thickness (Inch)
0.016	0.0135
0.020	0.0175
0.025	0.0225
0.032	0.0295
0.040	0.0370
0.050	0.0460
0.063	0.0590
0.071	0.0670
0.080	0.0760
0.100	0.0950
0.125	0.1200
0.190	0.1800
0.250	0.2370

Allowable Material Thickness
Figure 101

AFT FUSELAGE FRAMES - REPAIR

1. Repairs

A. Refer to 51-70-00 for typical repairs and allowable wear and repair data.

AFT FUSELAGE STRINGER - STRUCTURAL IDENTIFICATION

1. Description (See Figure 1 and Table 1.)

A. The aft fuselage stringers provide longitudinal support of the overall composition of the fuselage. The stringers are located around the perimeter of the frames. The stringers are spaced approximately five inches apart and are made from aluminum extrusion cut to various lengths

B. The fuselage stringer provides overall structural continuity and aerodynamics of the aircraft.

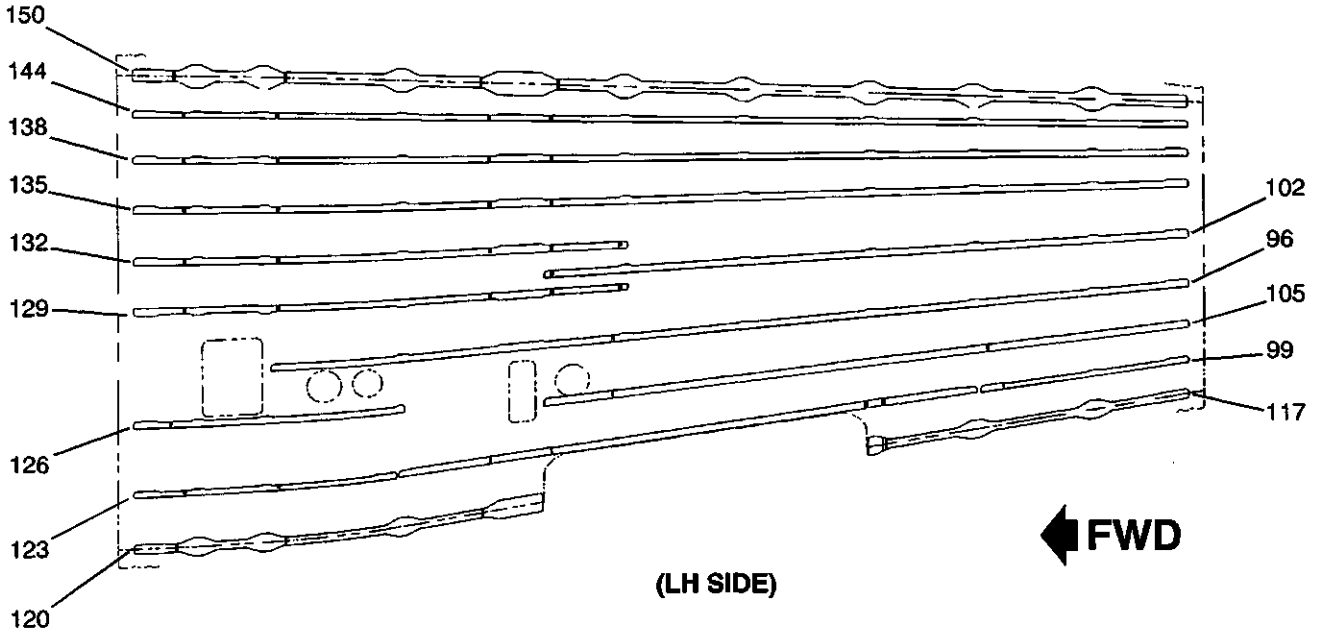

(LH SIDE)

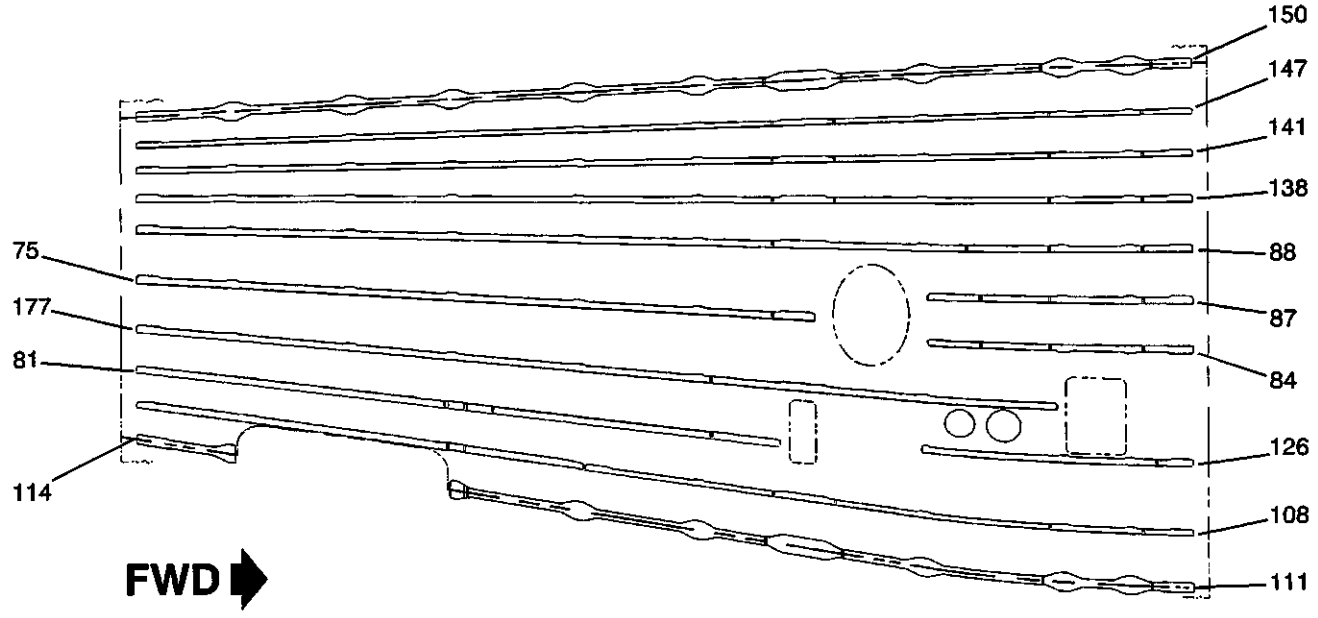

(RH SIDE)

S45-534020-001-01

Aft Fuselage Stringers Repair Index
Figure 1

ITEM NO.	DWG. NO.	DESCRIPTION	EFF CODE	MATERIAL	GAGE	FINISH CODE	REPAIR FIG. NO.
		Aft Fuselage Stringers					
	4553005001	Aft Fuselage Assy.	1	-	-	-	-
	4553005002	• Lower Panel Assy.	1	-	-	-	-
-	4553507036	• • Stringer 12 - 13, RH	1	2024-T8511	1	F3-8	Replace
-	4553507034	• • Stringer 12, RH	1	2024-T8511	1	F3-8	Replace
-	4553507033	• • Stringer 13, RH	1	2024-T8511	1	F3-8	Replace
-	4553507032	• • Stringer 13 - 14, RH	1	2024-T8511	1	F3-8	Replace
-	4553507031	• • Stringer 14, RH	1	2024-T8511	1	F3-8	Replace
-	4553507030	• • Stringer 15, RH	1	2024-T8511	1	F3-8	Replace
-	4553507029	• • Stringer 15 - 15A, RH	1	2024-T8511	1	F3-8	Replace
-	4553507028	• • Stringer 15A, RH	1	2024-T8511	1	F3-8	Replace
-	4553507027	• • Stringer 16, RH	1	2024-T8511	5	F3-8	Replace
-	4553507026	• • Stringer 17 - 18, RH	1	2024-T8511	4	F3-8	Replace
-	4553507025	• • Stringer 18, RH	1	2024-T8511	5	F3-8	Replace
-	4553507024	• • Stringer 19	1	2024-T8511	4	F3-8	Replace
-	4553507023	• • Stringer 18, LH	1	2024-T8511	4	F3-8	Replace
-	4553507022	• • Stringer 17, LH & RH	1	2024-T8511	2	F3-8	Replace
-	4553507021	• • Stringer 16 - 17, LH	1	2024-T8511	5	F3-8	Replace
-	4553507020	• • Stringer 16, LH	1	2024-T8511	4	F3-8	Replace
-	4553507019	• • Stringer 15A, LH	1	2024-T8511	4	F3-8	Replace
-	4553507018	• • Stringer 15, LH	1	2024-T8511	5	F3-8	Replace
-	4553507017	• • Stringer 14, LH	1	2024-T8511	1	F3-8	Replace
-	4553507016	• • Stringer 13 - 14, LH	1	2024-T8511	1	F3-8	Replace
-	4553507015	• • Stringer 13, LH	1	2024-T8511	1	F3-8	Replace
-	4553507014	• • Stringer 12, LH Aft	1	2024-T8511	1	F3-8	Replace
-	4553507013	• • Stringer 12, LH Fwd	1	2024-T8511	1	F3-8	Replace
-	4553005006	• Upper Panel Assy.	1	-	-	-	-
75	4553507078	• • Stringer 5 - 6, RH	1	2024-T8511	1	F3-8	Replace
-	4553507074	• • Stringer 4, RH	1	2024-T8511	1	F3-8	Replace
-	4553507083	• • Stringer 8 - 9, RH	1	2024-T8511	1	F3-8	Replace
84	4553507076	• • Stringer 6, RH	1	2024-T8511	1	F3-8	Replace
87	4553507075	• • Stringer 5, RH	1	2024-T8511	1	F3-8	Replace
		- Not Illustrated					

Aft Fuselage Stringers Repair Index
Table 1 (Sheet 1 of 2)

ITEM NO.	DWG. NO.	DESCRIPTION	EFF CODE	MATERIAL	GAGE	FINISH CODE	REPAIR FIG. NO.
88	4553507074	• • Stringer 4, RH	1	2024-T8511	1	F3-8	Replace
-	4553507052	• • Splice, Stringer 10, LH & RH	1	2024-T3 Clad	0.050	F3-8	Replace
-	4553507050	• • Splice, Stringer 10, RH	1	2024-T3 Clad	0.050	F3-8	Replace
96	4553507041	• • Stringer 7, LH	1	2024-T8511	1	F3-8	Replace
99	4553507042	• • Stringer 10, LH	1	2024-T8511	1	F3-8	Replace
102	4553507081	• • Stringer 5 - 6, LH	1	2024-T8511	1	F3-8	Replace
-	4553507039	• • Stringer 8 - 9, LH	1	2024-T8511	1	F3-8	Replace
108	4553507038	• • Stringer 10, RH	1	2024-T8511	1	F3-8	Replace
111	4553507037	• • Stringer 11, RH Aft	1	2024-T8511	2	F3-8	Replace
-	4553507035	• • Stringer 11, RH Fwd	1	2024-T8511	2	F3-8	Replace
117	4553507012	• • Stringer 11, LH Aft	1	2024-T8511	2	F3-8	Replace
120	4553507011	• • Stringer 11, LH Fwd	1	2024-T8511	2	F3-8	Replace
123	4553507010	• • Stringer 10, LH	1	2024-T8511	1	F3-8	Replace
126	4553507008	• • Stringer 8, LH & RH	1	2024-T8511	1	F3-8	Replace
129	4553507082	• • Stringer 6, LH	1	2024-T8511	1	F3-8	Replace
132	4553507080	• • Stringer 5, LH	1	2024-T8511	1	F3-8	Replace
135	4553507079	• • Stringer 4, LH	1	2024-T8511	1	F3-8	Replace
138	4553507003	• • Stringer 3, LH & RH	1	2024-T8511	1	F3-8	Replace
141	4553507072	• • Stringer 2, RH	1	2024-T8511	1	F3-8	Replace
144	4553507002	• • Stringer 2, LH	1	2024-T8511	1	F3-8	Replace
147	4553507071	• • Stringer 1, RH	1	2024-T8511	1	F3-8	Replace
150	4553507000	• • Stringer 1, LH	1	2024-T8511	3	F3-8	Replace
153	4553507077	• • Stringer 7, RH	1	2024-T8511	1	F3-8	Replace
-	4553507053	• Splice, Stringer 16 FS 567.91	1	7075-T76	0.063	F3-8	Replace
		- Not Illustrated					

EFFECTIVITY CODE	AIRCRAFT SERIAL NUMBERS
1	45-001 AND SUBSEQUENT

NOTES

1 SB07 10 001
2 SB07 10 002
3 SB07 10 011
4 SB07 10 018
5 SB07 10 020

Aft Fuselage Stringers Repair Index
Table 1 (Sheet 2 of 2)

AFT FUSELAGE STRINGERS - ALLOWABLE DAMAGE

1. Allowable Damage Limits

NOTE: All dimensions are in inches unless otherwise specified.

A. Fasteners
(1) Loose or failed rivets are not allowed. A loose or failed rivet can cause increased stress concentrations on the remaining rivets and lead to progressive joint failure. A careful inspection must be performed to ensure that joint failure has not spread from the area of the loose or failed rivet. (Refer to 51-40-05 for definition of rivet failure.)
(2) Loose or failed screws are not allowed. A loose or failed screw can cause increased stress concentrations on surrounding screws and lead to progressive joint failure. A careful inspection must be performed to ensure that the joint failure has not spread from the area of the loose or failed screw.

B. Cracks
(1) Cracks in any fitting or forging are not allowed. Cracked fittings or forgings must be replaced.
(2) Cracks in components other than fittings and forgings are considered allowable if properly repaired and refinished in accordance with 51-70-00.

C. Deformation
(1) Deformation of the aft fuselage stringer structure is not allowed.

D. Corrosion (See Figure 101.)
(1) Corrosion damage is permissible if the affected area is properly repaired, refinished in accordance with 51-30-15 and these repairs do not reduce the original material thickness more than specified. (Refer to 51-70-00.)
(2) Structural components must be repaired or replaced if corrosion repair reduces the original material thickness more than specified.

E. Dents
(1) Dents are permissible if smooth and without abrupt changes in contour, do not exceed 0.100 inch (2.54 mm) in depth, do not exceed 10% of total surface area in one (1) square foot, and are not closer than 0.50 inch (12.7 mm) to any rivet or structural area.
(2) Dents are not allowed if sharp, a fracture of the skin has occurred greater than 0.100 inch (2.54 mm) in depth, exceeds 10% of the total surface area in one (1) square foot, and are closer than 0.50 inch (12.7 mm) to a rivet or structural area. Such dents shall be repaired or the component replaced.

F. Scratches (See Figure 101.)
(1) Scratches are permissible if the affected area is sanded smooth, refinished in accordance with 51-70-00, and the repairs do not reduce the original material thickness more than specified. (Refer to 51-30-15 for protective treatment procedures.)
(2) Structural components must be replaced or repaired if scratches reduce the original material thickness by more than specified.

G. Nicks (See Figure 101.)
   (1) Nicks are permissible if the affected area is sanded smooth, refinished in accordance with 51-70-00, and the repairs do not reduce the original material thickness more than specified. (Refer to 51-30-15 for protective treatment procedures.)
   (2) Structural components must be replaced or repaired if nicks reduce the original material thickness more than specified.

H. Fittings and Forgings
   (1) Fittings or forgings must be replaced if cracked or if fitting hole (non-bushed) tolerance exceeds the allowable limits. (Refer to 51-70-00.)
   (2) Fittings or forgings with bushing shall be repaired.

Nominal Thickness (Inch)	Minimum Thickness (Inch)
0.016	0.0135
0.020	0.0175
0.025	0.0225
0.032	0.0295
0.040	0.0370
0.050	0.0460
0.063	0.0590
0.071	0.0670
0.080	0.0760
0.100	0.0950
0.125	0.1200
0.190	0.1800
0.250	0.2370

Allowable Material Thickness
Figure 101

AFT FUSELAGE STRINGERS - REPAIR

1. Repairs

A. Refer to 51-70-00 for typical repairs and allowable wear and repair data.

AFT FUSELAGE SKINS - STRUCTURAL IDENTIFICATION

1. Description (See Figure 1 and Table 1.)

A. The aft fuselage skins provide structural integrity and aerodynamic contour for the aft fuselage.

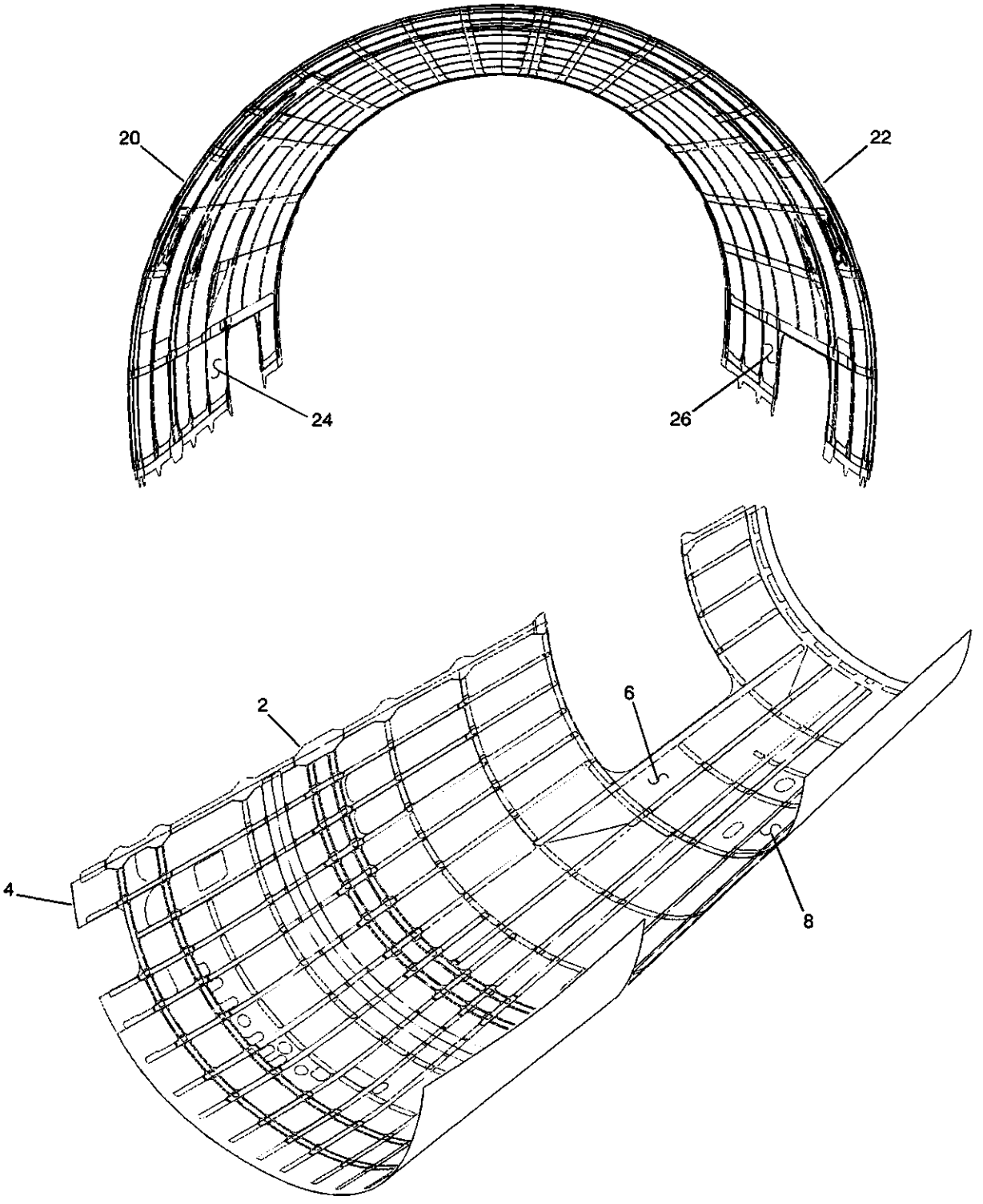

S45-534040-001-01

Aft Fuselage Skins Repair Index
Figure 1

ITEM NO.	DWG. NO.	DESCRIPTION	EFF CODE	MATERIAL	GAGE	FINISH CODE	REPAIR FIG. NO.
		Aft Fuselage Skins					
	4553005001	Aft Fuselage Assy.	1	-	-	-	-
-	4553005002	• Lower Panel Assy.	1	-	-	-	-
2	4553506003	• • Skin Panel, Aft Lwr	1	2024-T3	0.063	F3-8	Replace
4	4553506002	• • Skin Panel, Fwd Lwr	1	2024-T3	0.063	F3-8	Replace
6	4553504615	• • Skin Doubler, RH Lwr	1	2024-T3 Clad	0.063	F3-8	Replace
8	4553504614	• • Skin Doubler, LH Lwr	1	2024-T3 Clad	0.063	F3-8	Replace
-	4553005006	• Upper Panel Assy.	1	-	-	-	-
20	4553506005	• • Skin Panel, RH Top	1	2024-T42	0.080	1	Replace
22	4553506004	• • Skin Panel, LH Top	1	2024-T42	0.080	1	Replace
24	4553504656	• • Skin Doubler, RH Upper	1	2024-T3	0.063	F3-8	Replace
26	4553504655	• • Skin Doubler, LH Upper	1	2024-T3	0.063	F3-8	Replace
		- Not Illustrated					

EFFECTIVITY CODE	AIRCRAFT SERIAL NUMBERS
1	45-005 AND SUBSEQUENT

NOTES

1 F3-8 interior, F3 exterior, except pylon area F3-8

Aft Fuselage Skins Repair Index
Table 1

AFT FUSELAGE SKINS - ALLOWABLE DAMAGE

1. Allowable Damage Limits

NOTE: All dimensions are in inches unless otherwise specified.

A. Fasteners
(1) Loose or failed rivets are not allowed. A loose or failed rivet can cause increased stress concentrations on the remaining rivets and lead to progressive joint failure. A careful inspection must be performed to ensure that joint failure has not spread from the area of the loose or failed rivet. (Refer to 51-40-05 for definition of rivet failure.)
(2) Loose or failed screws are not allowed. A loose or failed screw can cause increased stress concentrations on surrounding screws and lead to progressive joint failure. A careful inspection must be performed to ensure that the joint failure has not spread from the area of the loose or failed screw.

B. Cracks
(1) Cracks in any fitting or forging are not allowed. Cracked fittings or forgings must be replaced.
(2) Cracks in components other than fittings and forgings are considered allowable if properly repaired and refinished in accordance with 51-70-00.

C. Deformation
(1) Deformation of the aft fuselage skin structure is not allowed.

D. Corrosion (See Figure 101.)
(1) Corrosion damage is permissible if the affected area is properly repaired, refinished in accordance with 51-30-15 and these repairs do not reduce the original material thickness more than specified. (Refer to 51-70-00.)
(2) Structural components must be repaired or replaced if corrosion repair reduces the original material thickness more than specified.

E. Dents
(1) Dents are permissible if smooth and without abrupt changes in contour, do not exceed 0.100 inch (2.54 mm) in depth, do not exceed 10% of total surface area in one (1) square foot, and are not closer than 0.50 inch (12.7 mm) to any rivet or structural area.
(2) Dents are not allowed if sharp, a fracture of the skin has occurred greater than 0.100 inch (2.54 mm) in depth, exceeds 10% of the total surface area in one (1) square foot, and are closer than 0.50 inch (12.7 mm) to a rivet or structural area. Such dents shall be repaired or the component replaced.

F. Scratches (See Figure 101.)
(1) Scratches are permissible if the affected area is sanded smooth, refinished in accordance with 51-70-00, and the repairs do not reduce the original material thickness more than specified. (Refer to 51-30-15 for protective treatment procedures.)
(2) Structural components must be replaced or repaired if scratches reduce the original material thickness by more than specified.

G. Nicks (See Figure 101.)

(1) Nicks are permissible if the affected area is sanded smooth, refinished in accordance with 51-70-00, and the repairs do not reduce the original material thickness more than specified. (Refer to 51-30-15 for protective treatment procedures.)

(2) Structural components must be replaced or repaired if nicks reduce the original material thickness more than specified.

H. Fittings and Forgings

(1) Fittings or forgings must be replaced if cracked or if fitting hole (non-bushed) tolerance exceeds the allowable limits. (Refer to 51-70-00.)

(2) Fittings or forgings with bushing shall be repaired.

Nominal Thickness (Inch)	Minimum Thickness (Inch)
0.016	0.0135
0.020	0.0175
0.025	0.0225
0.032	0.0295
0.040	0.0370
0.050	0.0460
0.063	0.0590
0.071	0.0670
0.080	0.0760
0.100	0.0950
0.125	0.1200
0.190	0.1800
0.250	0.2370

Allowable Material Thickness
Figure 101

AFT FUSELAGE SKINS - REPAIR

1. Repairs

A. Refer to 51-70-00 for typical repairs and allowable wear and repair data.